CHAMPS Contributions to the Fourth High Lift Prediction Workshop

AIAA AVIATION Forum and Exposition, 27 June–1 July 2022, Chicago

Frédéric Plante, Post-doc researcher, AIAA Member
Éric Laurendeau, Professor, AIAA Senior Member

POLYTECHNIQUE MONTRÉAL
TECHNOLOGICAL UNIVERSITY

Summary

- Solver presentation
- Case 3 : Verification
- Case 1b : Grid refinement
- Case 2a : Polar, cold start versus warm start
- Conclusion

CHapel Multi-Physics Simulation

CHAMPS (CHapel Multi-Physics Simulation) is a software developed at Polytechnique Montréal :

- Unsteady Reynolds Averaged Navier-Stokes ;
- SA, $k-\omega$ SST, $QCR2000$ and $\gamma - Re_{\theta_t}$ turbulence models ;
- Aero-icing ;
  - Water droplet solver ;
  - Thermodynamique model ;
  - Stochastic icing ;
- Aero-elastic ;
- Global linear stability analysis ;

Written in Chapel language

Why Chapel ?

- Chapel is a new language which is an alternative to the classic C/C++ or Fortran with MPI paradigm ;
- Use a global namespace for direct access to local or remote variables ;
- Feature rich language, aiming to be as programmable as Python ;
- Object-oriented, allowing us to reuse structures for several models ;
- Chapel is a productive language :
  - Reduce the barrier of entry to HPC ;
  - Developed by a team of 7 (students and researchers) ;
  - CHAMPS started in the summer of 2019 and was used for the HLPW4, IPW1 and DPW7.

Numerical Method

Flow solver

- Cell-centered finite volume scheme ;
- Second order Roe scheme with piecewise linear reconstruction ;
- Green-Gauss gradient ;
- Venkatakrishnan limiter (removed when possible) ;
- Standard Spalart-Allmaras turbulence model ;
- Relaxation on the update of the gradients ;
- Implicit Euler iterative scheme ;
- Block Symmetric Gauss-Seidel linear solver.

Initialization strategy

- From free-stream (Cold start) ;
- From previous α (Warm start) ;
- Extrapolation from 2 previous α ($W = W_o + \frac{W_o - W_{oo}}{\alpha_o - \alpha_{oo}}(\alpha - \alpha_o)$).

CASE 3 - 2D HL-CRM grids

Meshes from the NASA Turbulence Model Resource website.

	Family 1		Family 2	
Grid	Nb. Nodes (K)	Nb. Cells (K)	Nb. Nodes (K)	Nb. Cells (K)
L1	174	174	270	139
L2	294	295	494	253
L3	508	508	758	388
L4	931	931	1.5	756
L5	1700	1700	2700	1400
L6	3200	3000	5100	2600
L7	6000	6000	9600	4800

CASE 3 - Iterative Convergence

2D HL-CRM : Reynolds number 5 million, Mach number 0.2 and $\alpha = 16°$

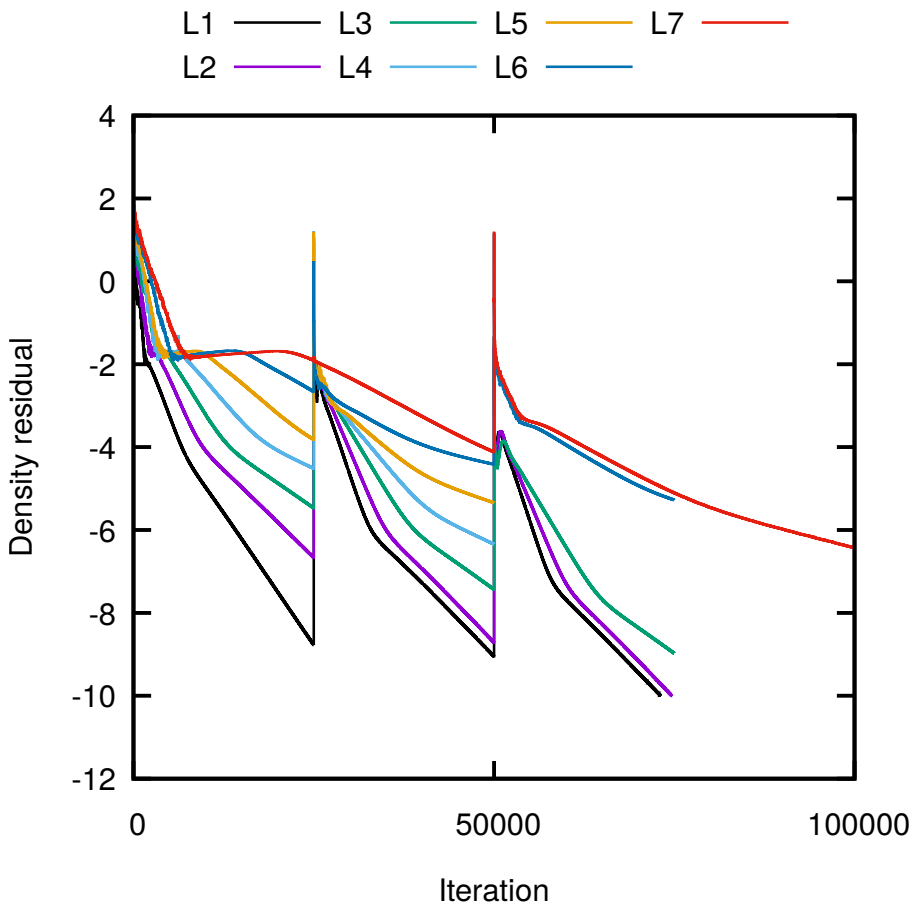

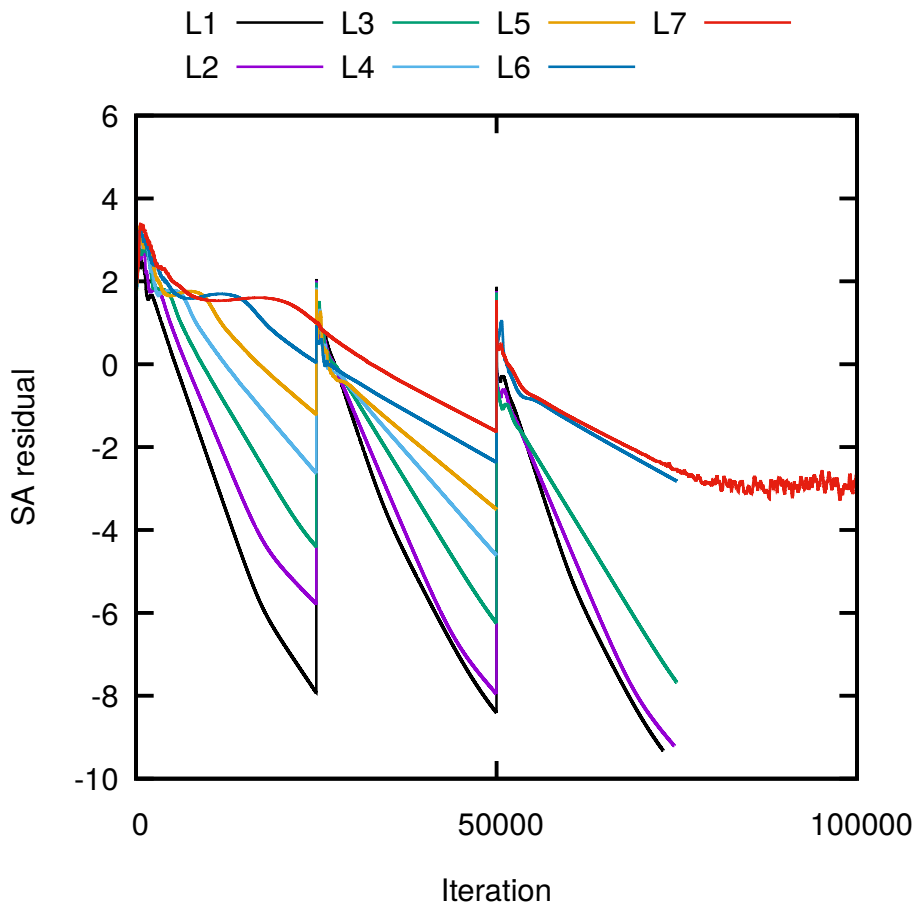

- Spikes in convergence when the strength of the limiter is reduced ;
- No limiter at the end of the simulation ;
- Convergence of at least 8 orders of magnitude for the density residuals.

CASE 3 - Forces Convergence

2D HL-CRM : Reynolds number 5 million, Mach number 0.2 and $\alpha = 16°$

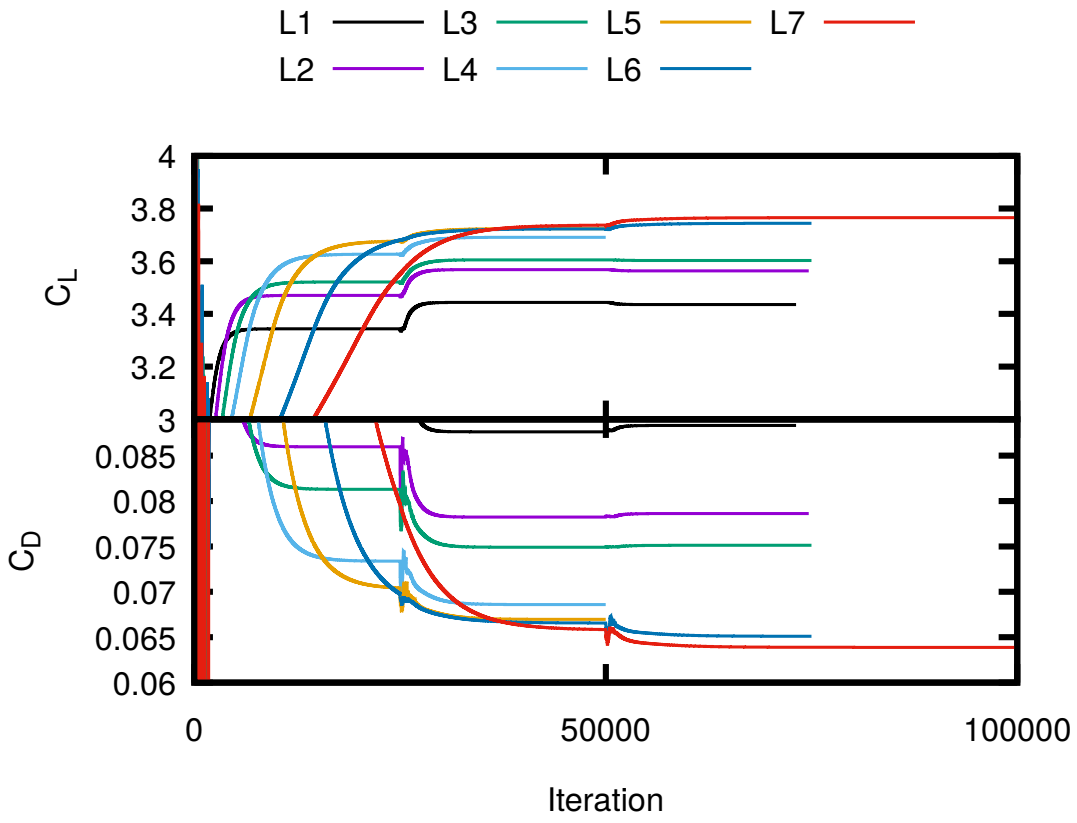

- Lift increases when the limiter is reduced ;
- Drag decreases when the limiter is reduced ;
- Convergence to a steady value reached.

CASE 3 - Grid Convergence

2D HL-CRM : Reynolds number 5 million, Mach number 0.2 and $\alpha = 16°$

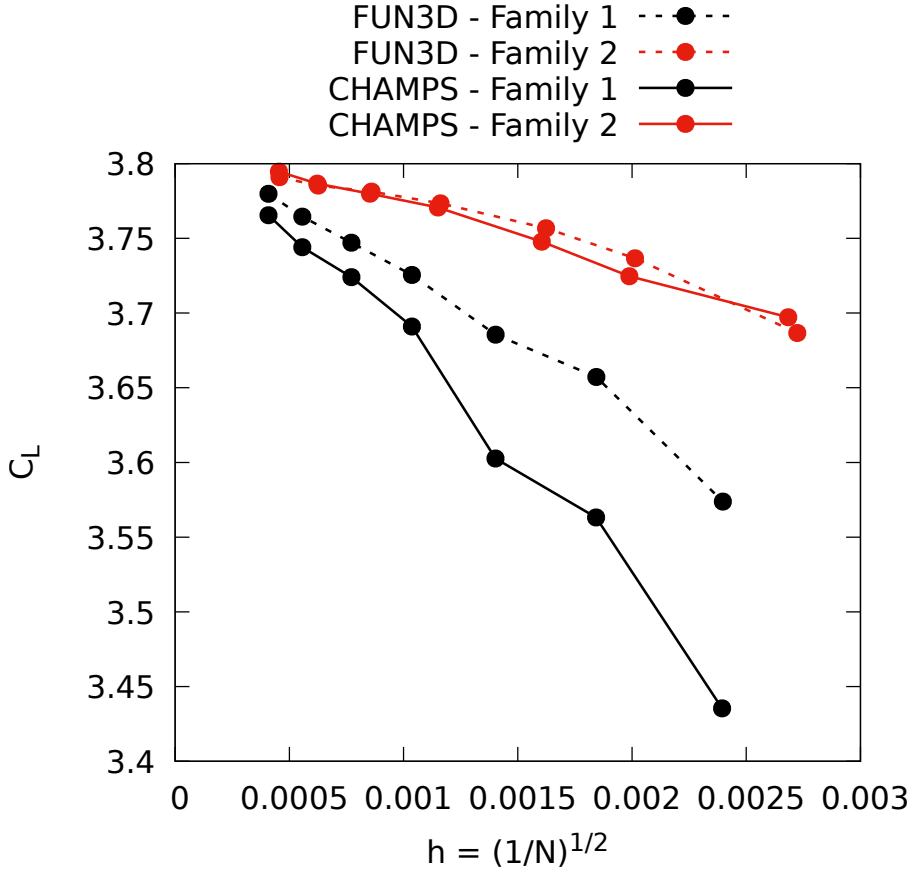

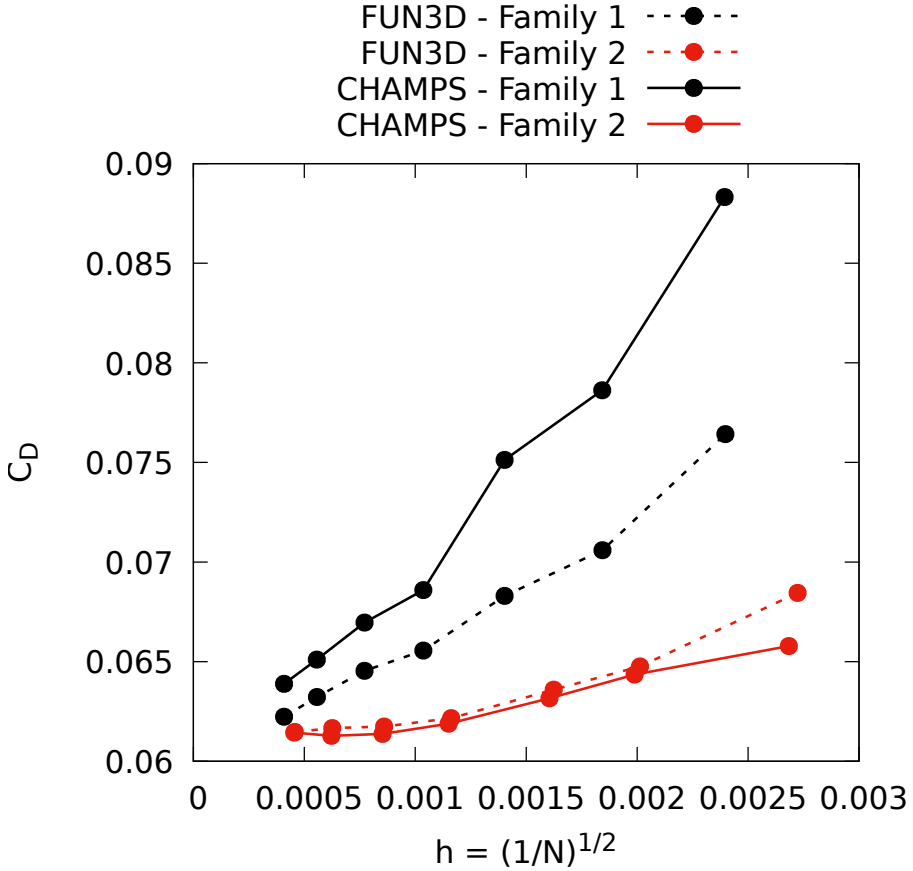

- Family 1 one has an offset compared to FUN3D ;
- Family 2 is well aligned with FUN3D ;
- FUN3D is vertex-centered and CHAMPS is cell-centered. There could be a combination of discretization and grid quality causing this offset.

CASE 1B - HLCRM Grids

Meshes from AIAA High Lift Prediction Workshop 4 website.

Grid	Nb. Nodes (M)	Nb. Cells (M)
Pointwise 2.3.A	12.3	21.8
Pointwise 2.3.B	32.3	52.8
Pointwise 2.3.C	92.0	141.5
Pointwise 2.3.D	203.0	301.0
ANSA 101.C		216.7

CASE 1B - Iterative Convergence

CRM-HL : Reynolds number 5.49 million, Mach number 0.2 and $\alpha = 7.05°$

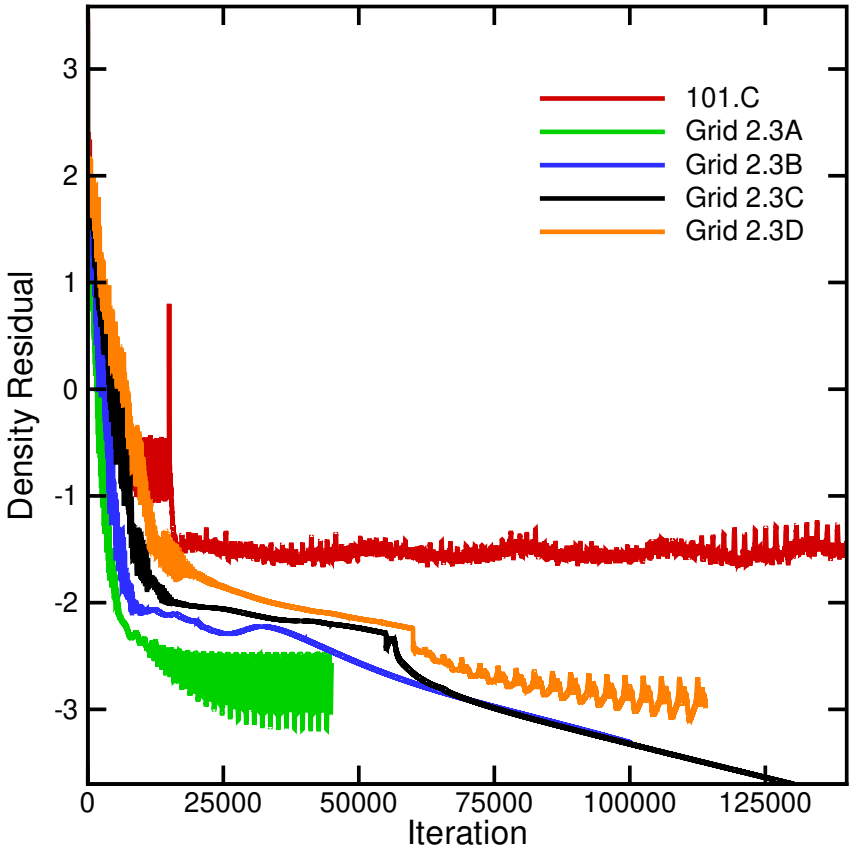

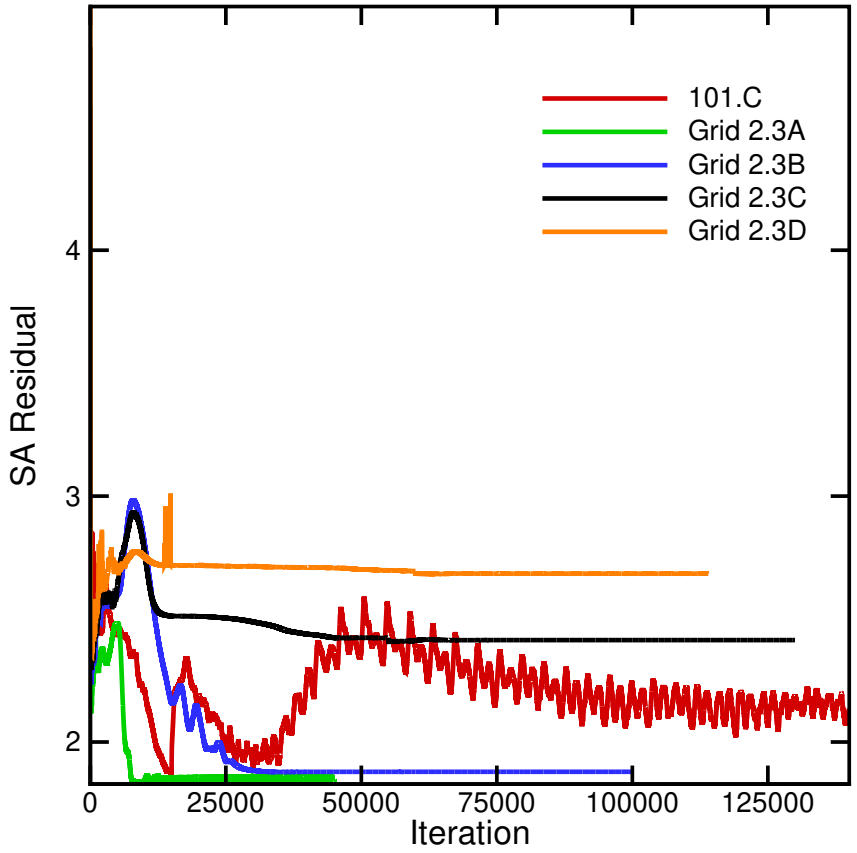

- Density convergence stagnates for grid 2.3A and 101.C ;
- Spalart-Allmaras residual does not converge (this seems to be caused by a small number of cells near the slat).

CASE 1B - Forces Convergence

CRM-HL : Reynolds number 5.49 million, Mach number 0.2 and $\alpha = 7.05°$

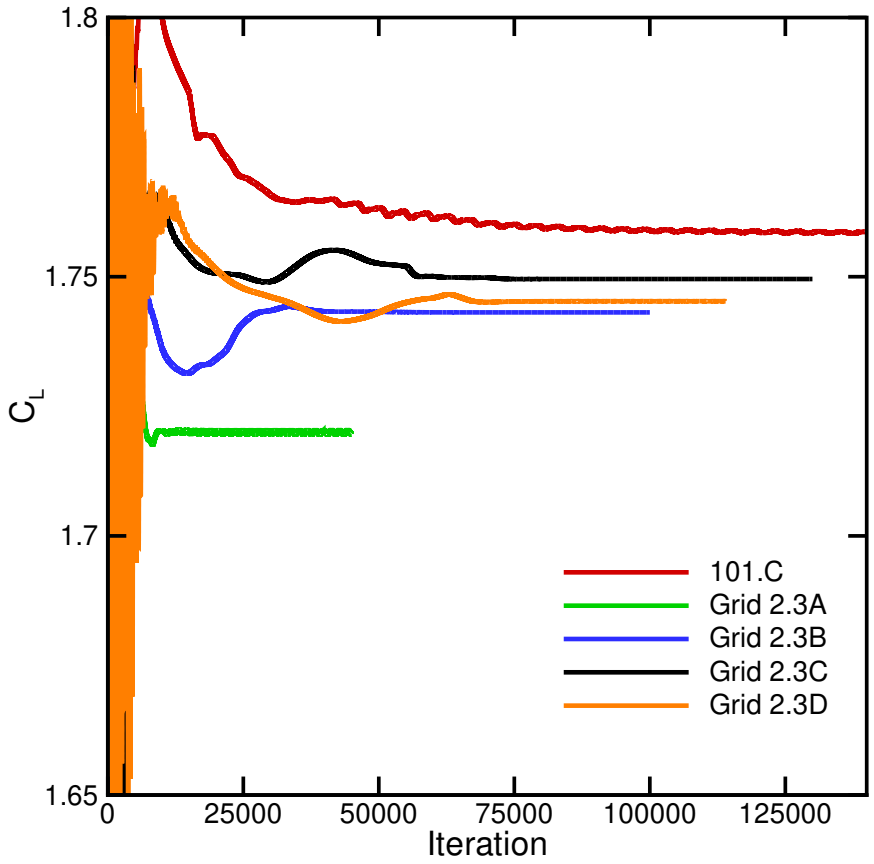

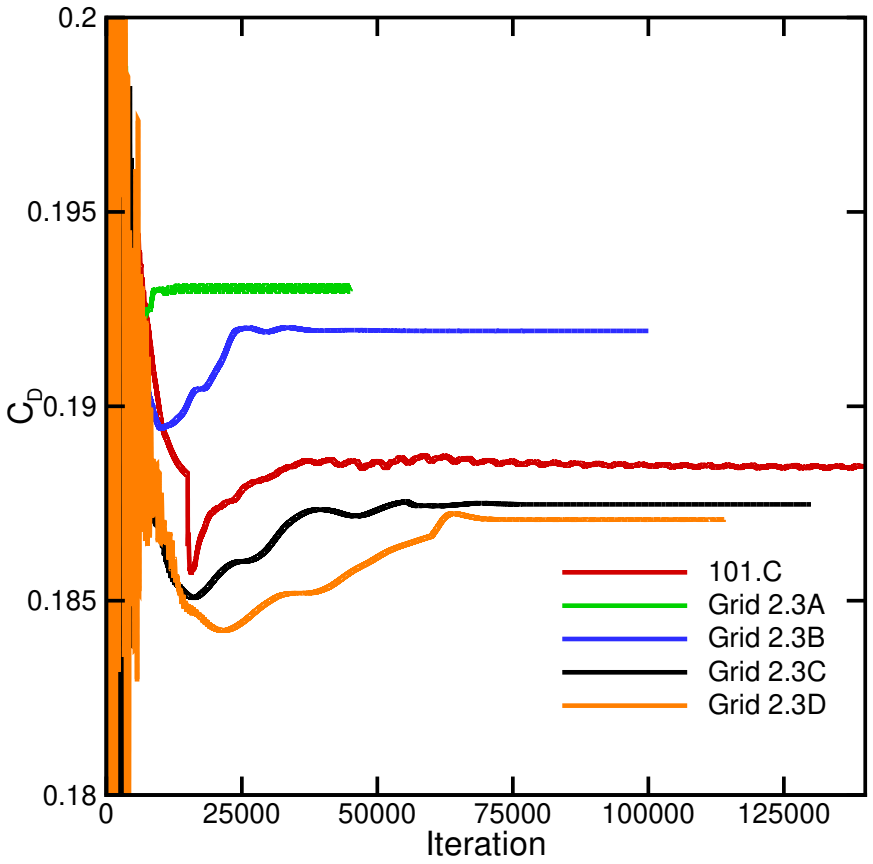

- Steady force value or small limit cycle achieved ;
- Non-monotonic convergence ;
- Grid convergence is not achieved with the pointwise grid family.

CASE 1B - Skin Friction

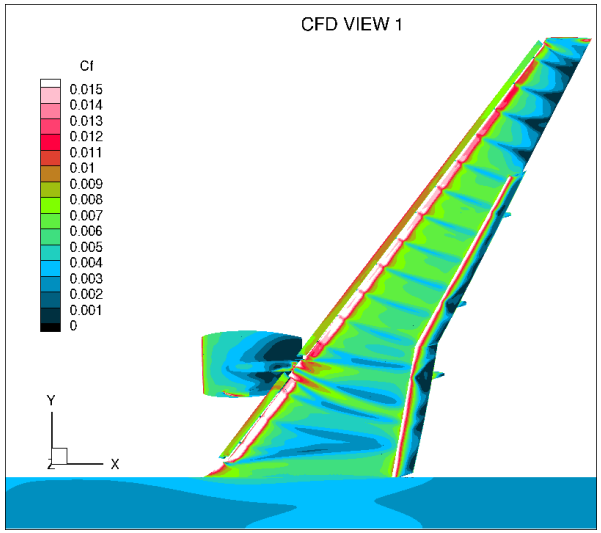

(a) Level A

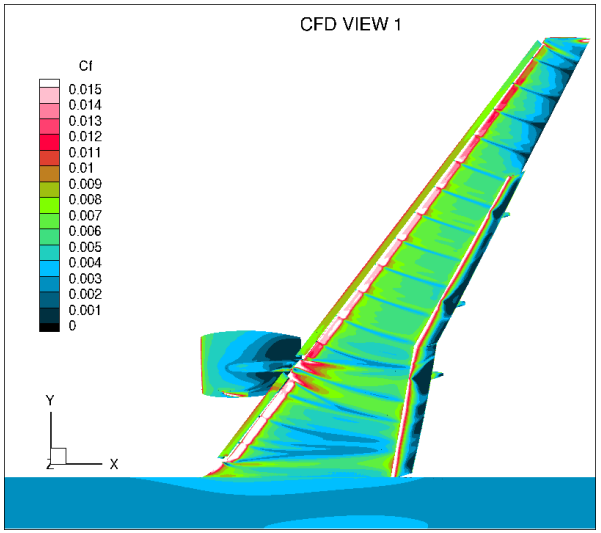

(b) Level C

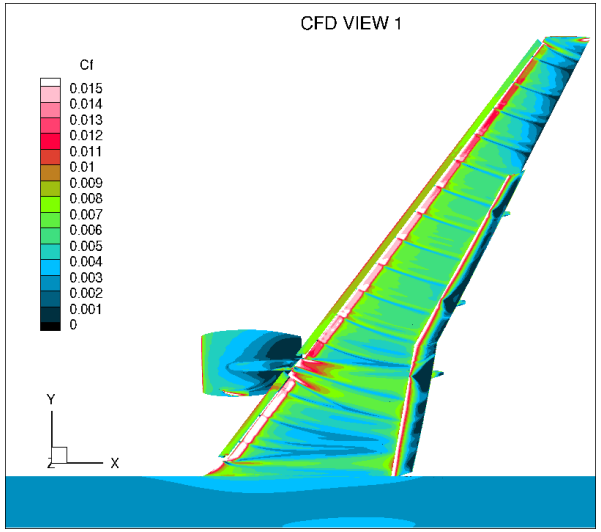

(c) Level D

CASE 2A - Polar

CRM-HL : Reynolds number 5.49 million and Mach number 0.2

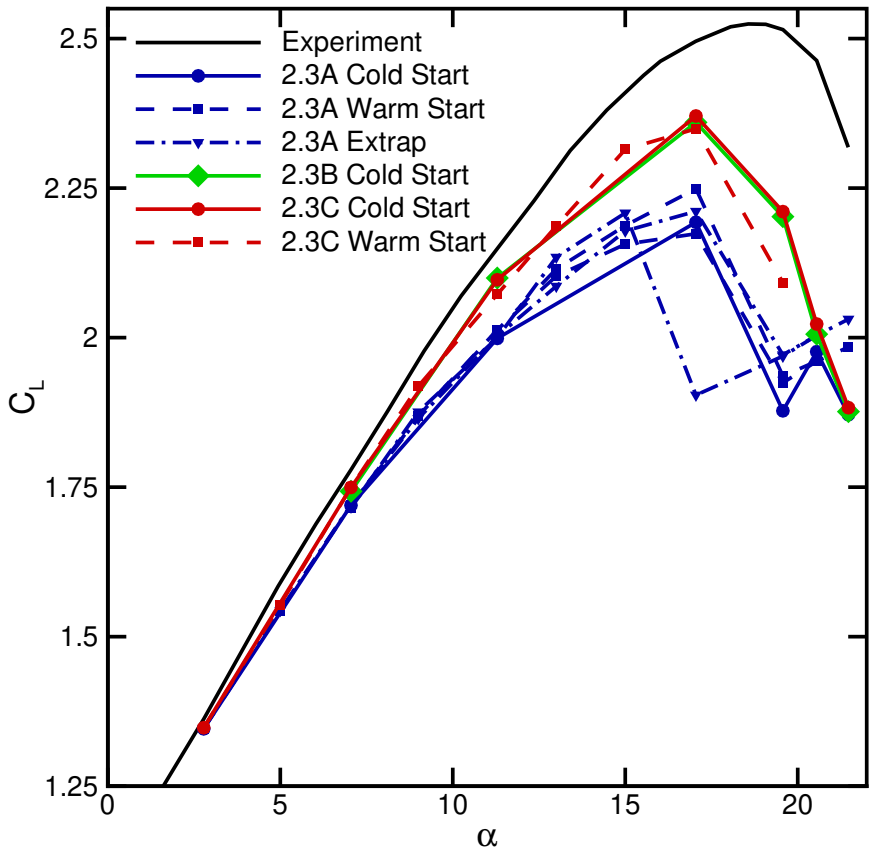

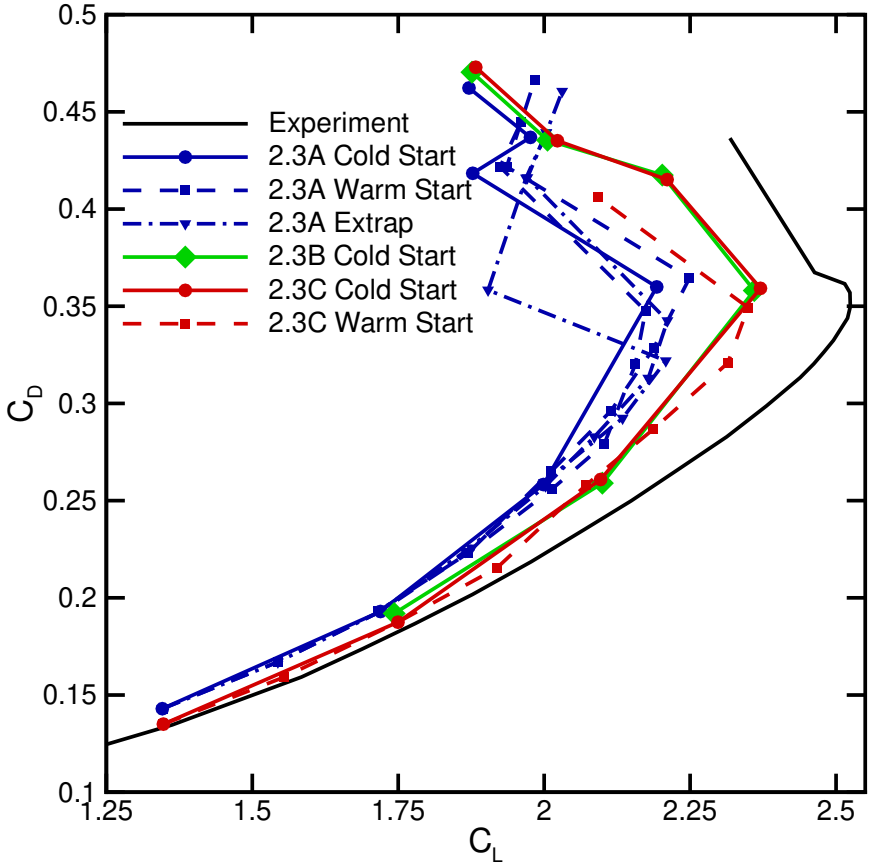

- Different solutions obtained when changing the initialization ;
- Level B and Level C lift coefficient are very similar.

CASE 2a - Level C Cold Start

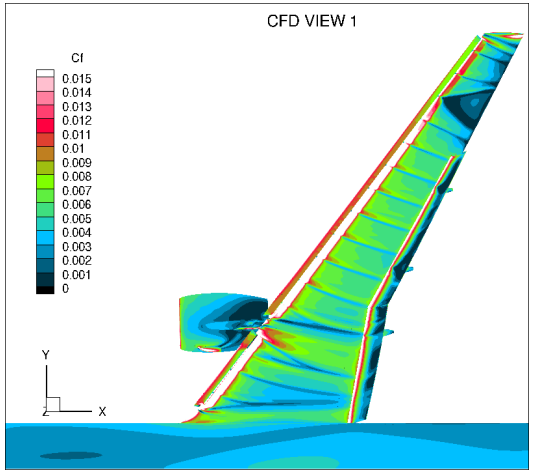

(a) $\alpha = 11.29^\circ$

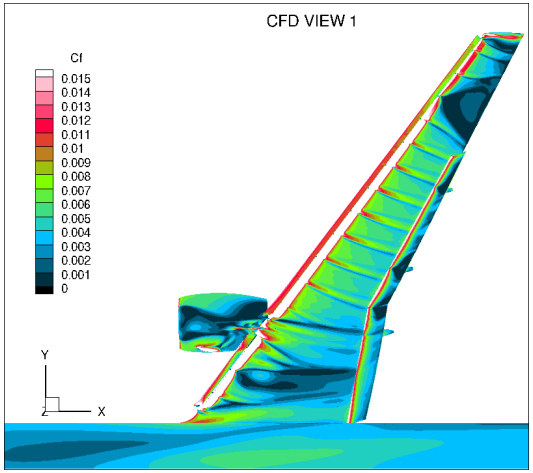

(b) $\alpha = 17.05^\circ$

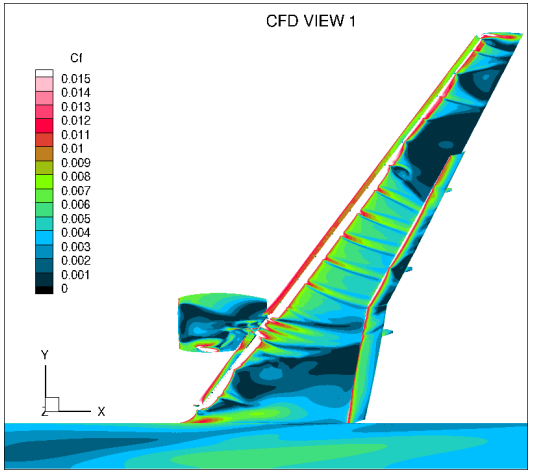

(c) $\alpha = 19.57^\circ$

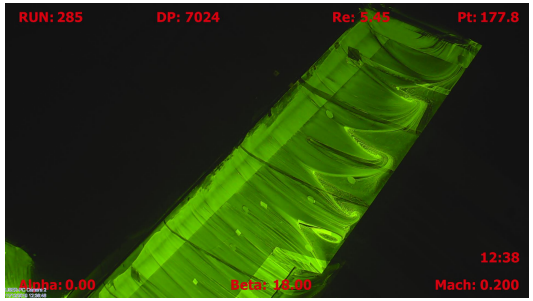

(d) $\alpha = 17.98^\circ$

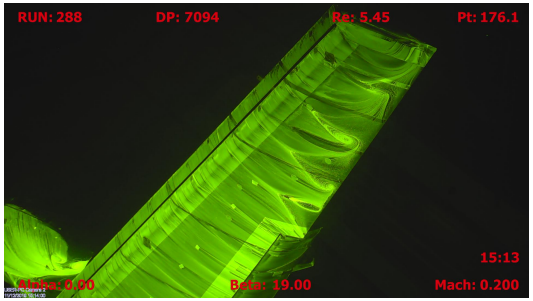

(e) $\alpha = 18.97^\circ$

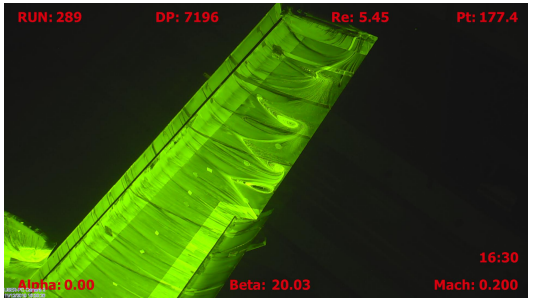

(f) $\alpha = 19.98^\circ$

CASE 2a - Level C Warm Start

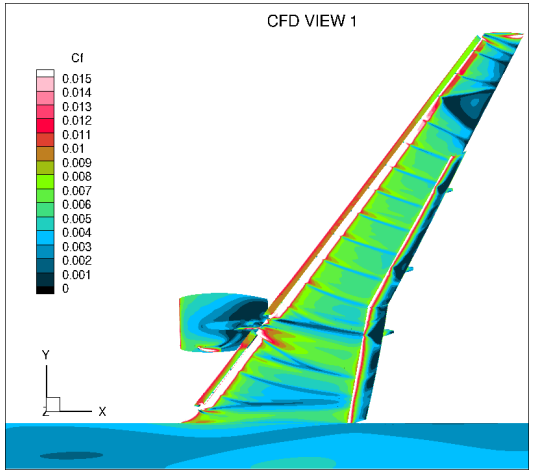

(a) $\alpha = 11.29^\circ$

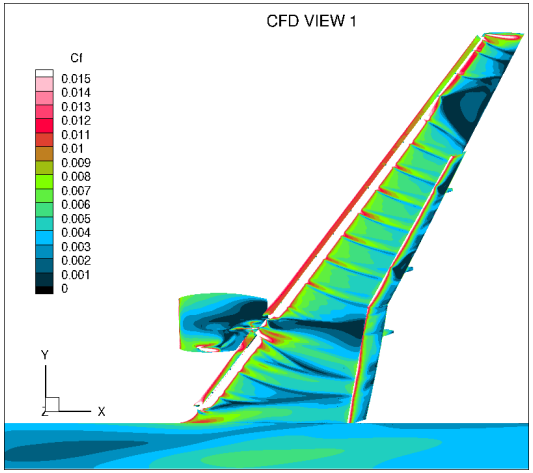

(b) $\alpha = 17.05^\circ$

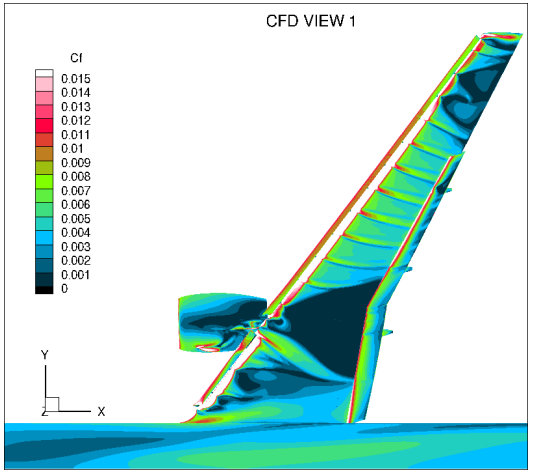

(c) $\alpha = 19.57^\circ$

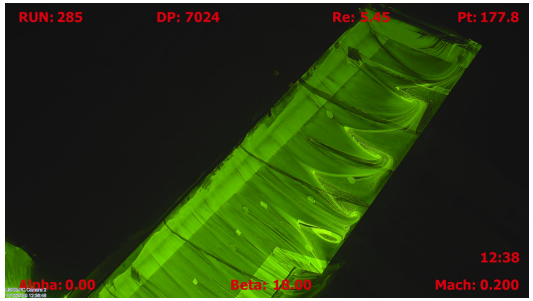

(d) $\alpha = 17.98^\circ$

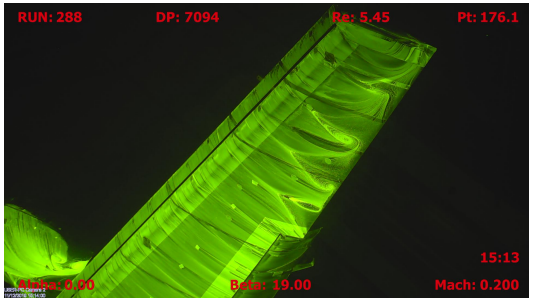

(e) $\alpha = 18.97^\circ$

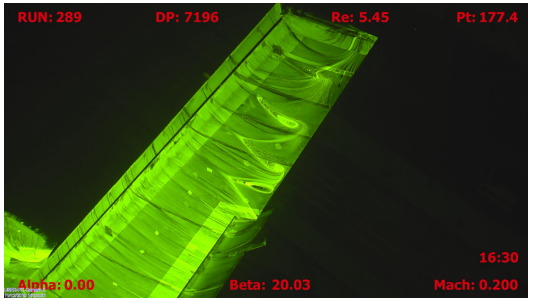

(f) $\alpha = 19.98^\circ$

CASE 2A - Solution Extrapolation

CRM-HL : Reynolds number 5.49 million and Mach number 0.2

First-order warm start : $\boldsymbol{W} = \boldsymbol{W}_o + \dfrac{\boldsymbol{W}_o - \boldsymbol{W}_{oo}}{\alpha_o - \alpha_{oo}}(\alpha - \alpha_o)$

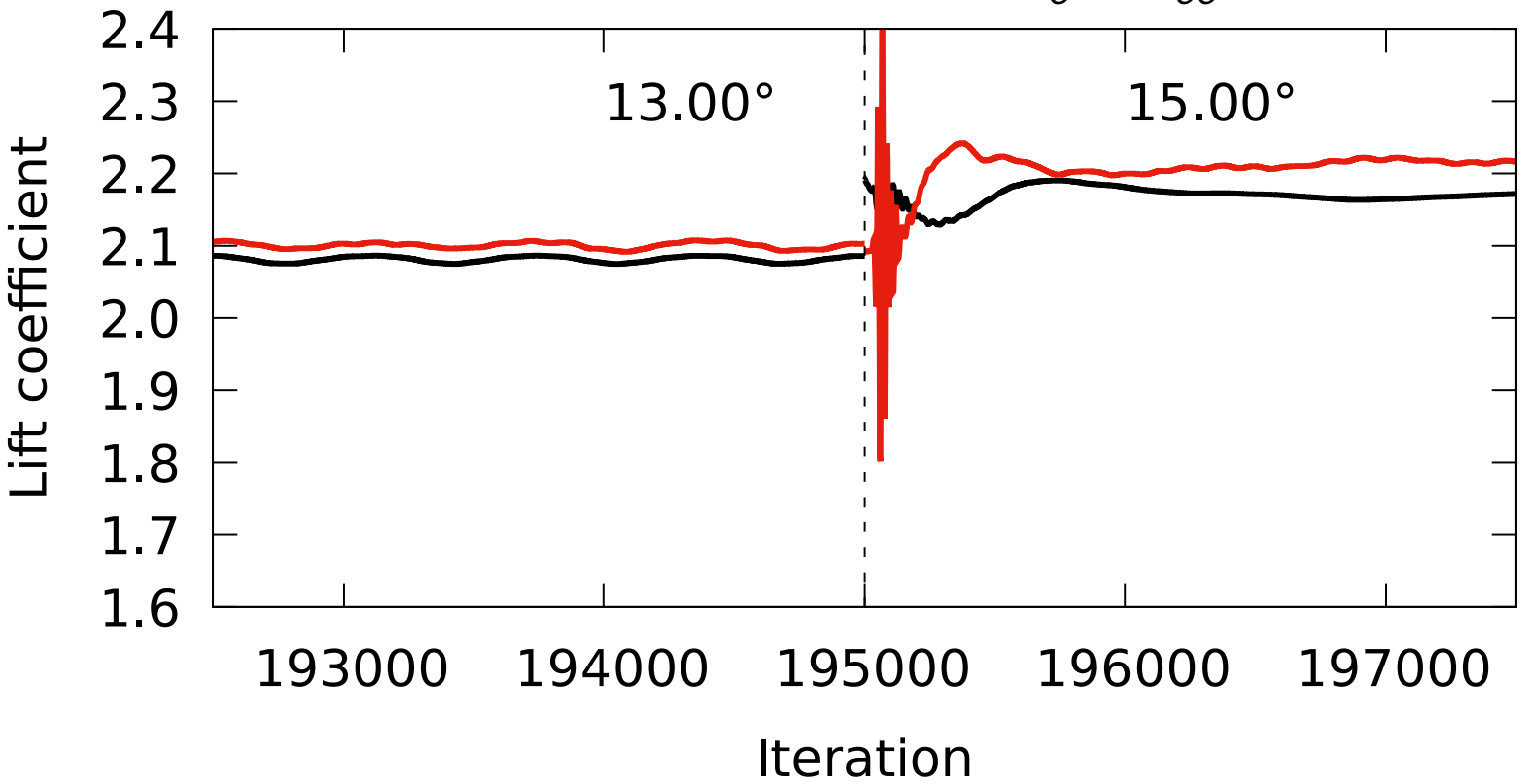

- Lift coefficient directly jumps with the first-order warm start ;
- The warm start method changes the path of the convergence.

CASE 2A - Level A Convergence

CRM-HL : Reynolds number 5.49 million and Mach number 0.2

$$\text{First-order warm start : } \boldsymbol{W} = \boldsymbol{W}_o + \frac{\boldsymbol{W}_o - \boldsymbol{W}_{oo}}{\alpha_o - \alpha_{oo}}(\alpha - \alpha_o)$$

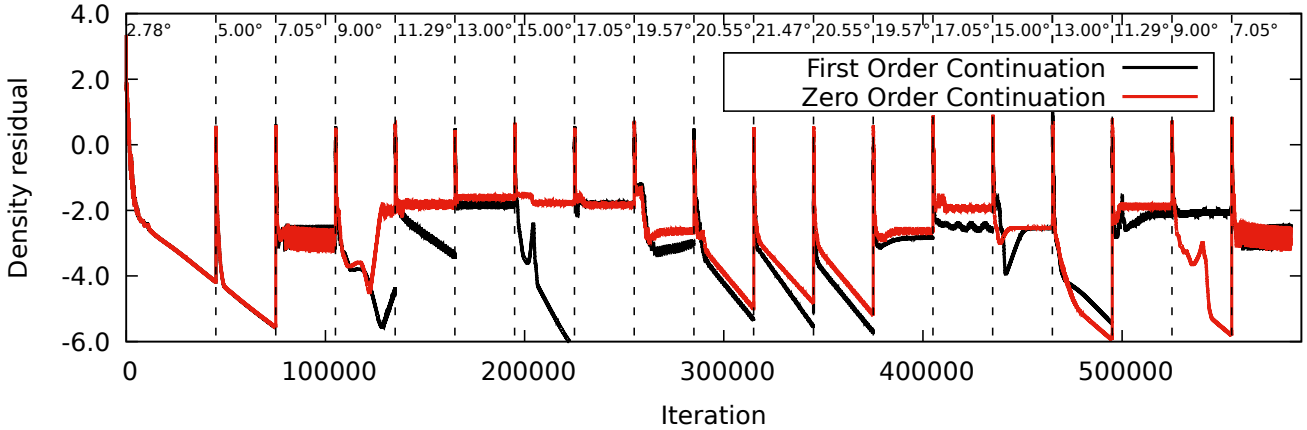

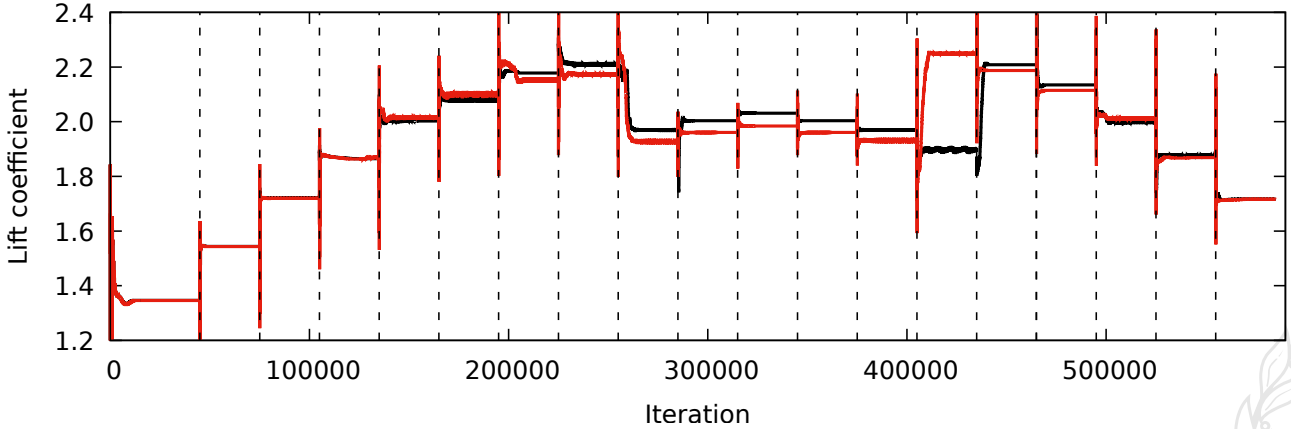

CASE 2A - Level A Skin Friction

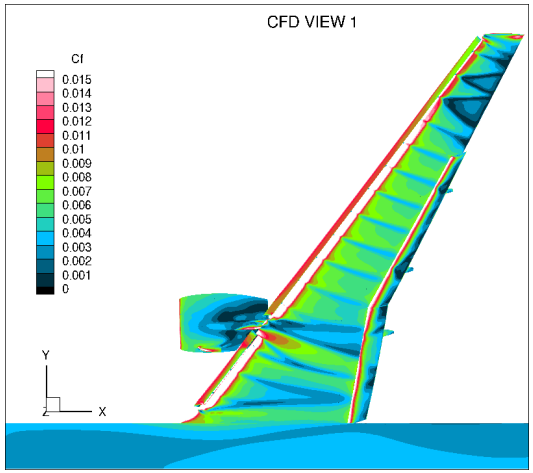

(a) $\alpha = 11.29^{\circ}$, cold start

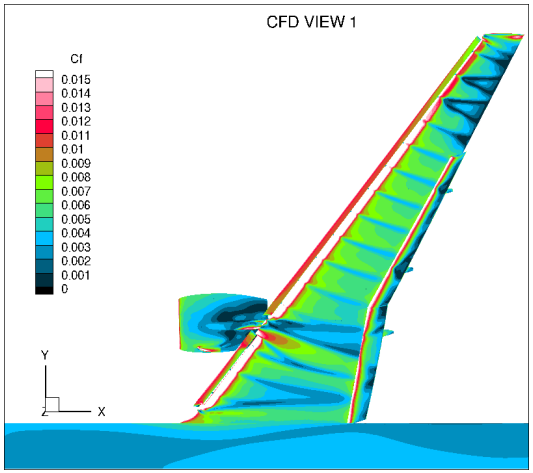

(b) zero order warm start

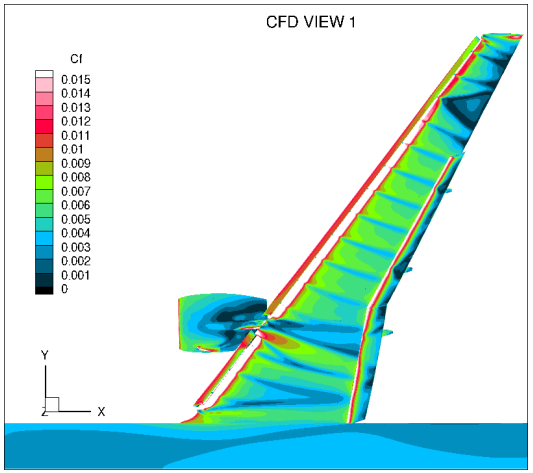

(c) first order warm start

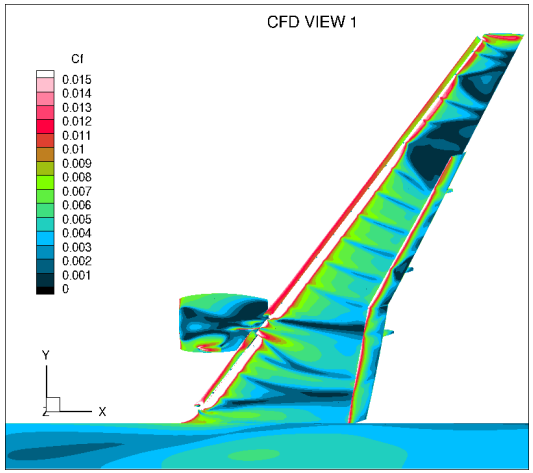

(d) $\alpha = 17.05^{\circ}$, cold start

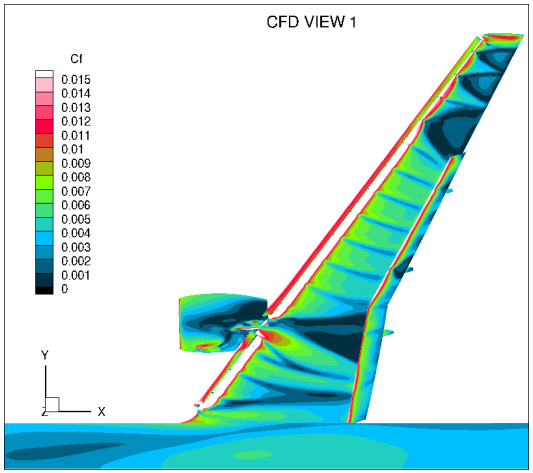

(e) zero order warm start

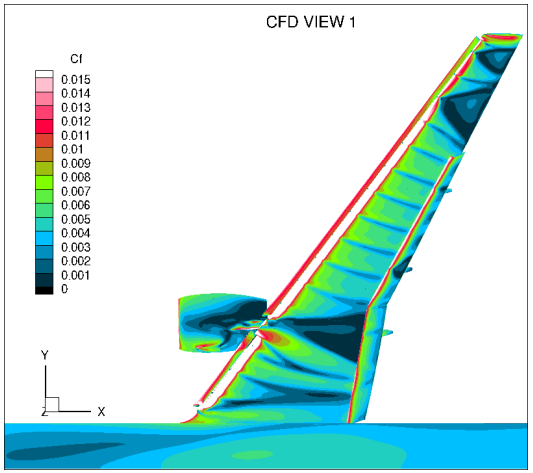

(f) first order warm start

Surface friction coefficients Increasing α.

CASE 2A - Level A Skin Friction

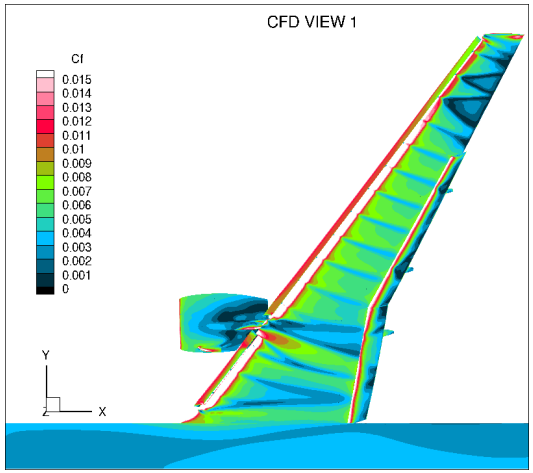

(a) $\alpha = 11.29^{\circ}$, cold start

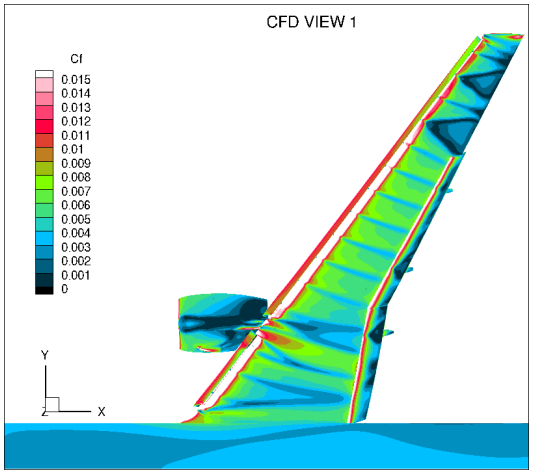

(b) zero order warm start

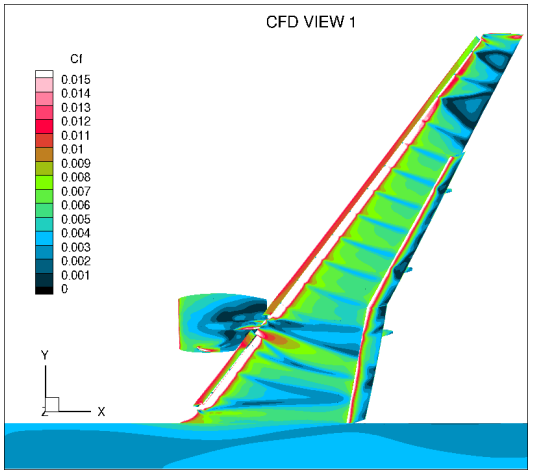

(c) first order warm start

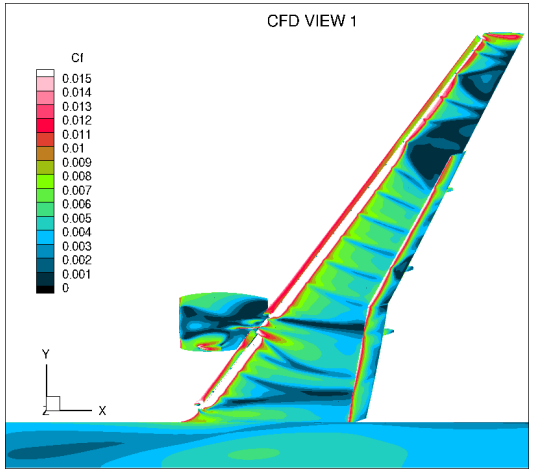

(d) $\alpha = 17.05^{\circ}$, cold start

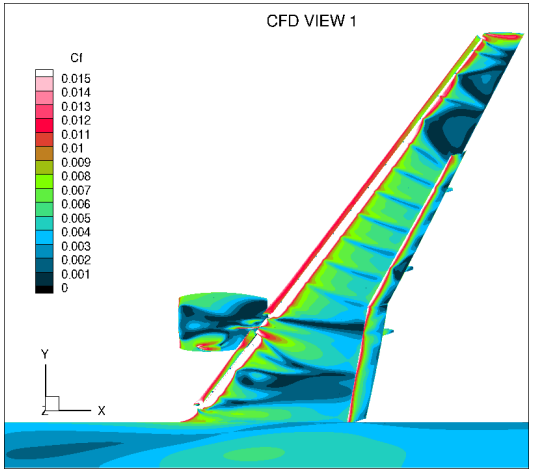

(e) zero order warm start

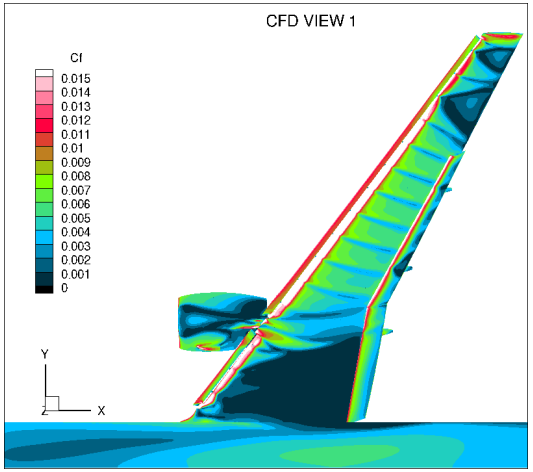

(f) first order warm start

Surface friction coefficients Decreasing α.

CASE 2A - Level A Convergence

CRM-HL : Reynolds number 5.49 million and Mach number 0.2

$$\text{First-order warm start : } \boldsymbol{W} = \boldsymbol{W}_o + \frac{\boldsymbol{W}_o - \boldsymbol{W}_{oo}}{\alpha_o - \alpha_{oo}}(\alpha - \alpha_o)$$

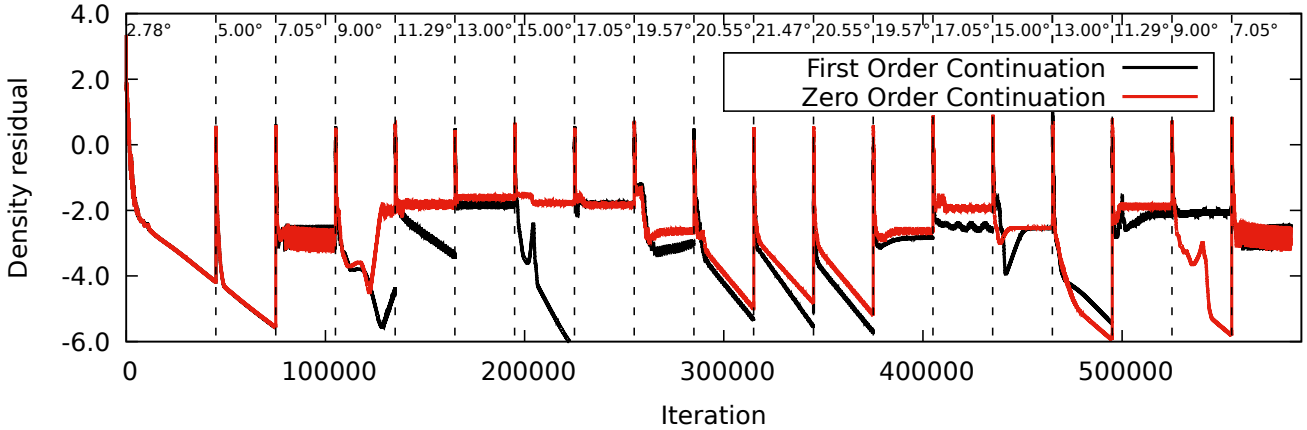

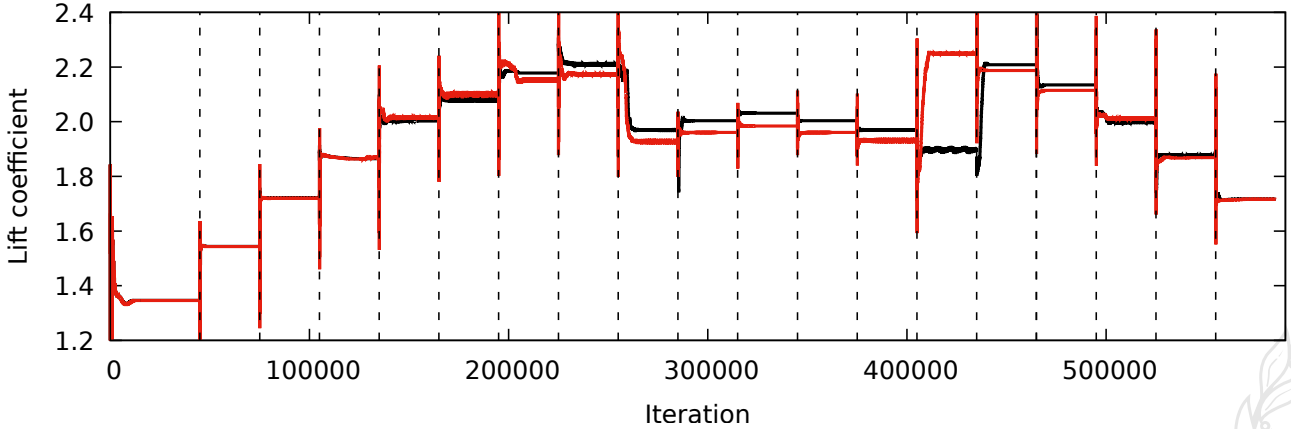

CASE 2A - Level A Skin Friction

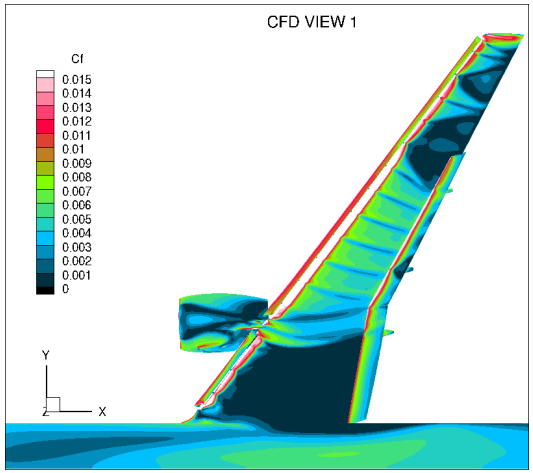

(a) $\alpha = 19.57^{\circ}$, cold start

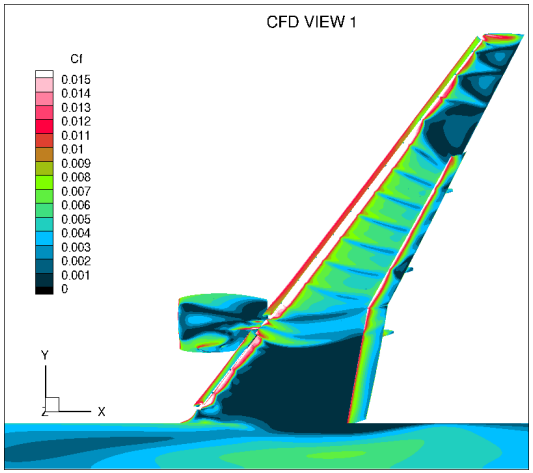

(b) zero order warm start

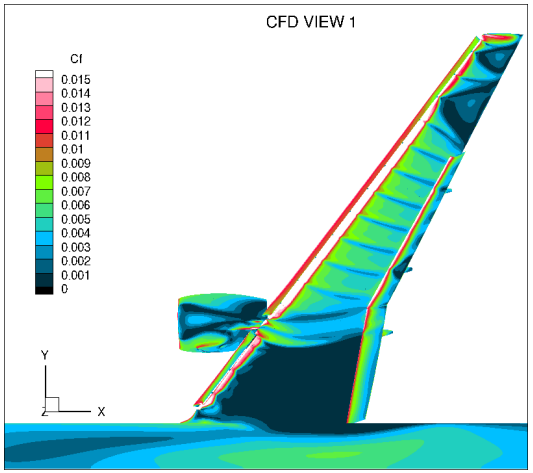

(c) first order warm start

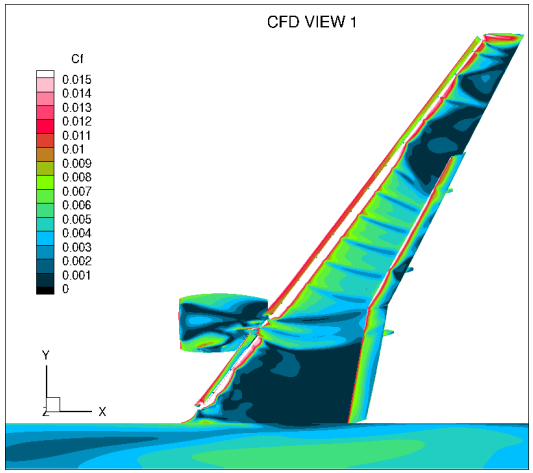

(d) $\alpha = 20.55^{\circ}$, cold start

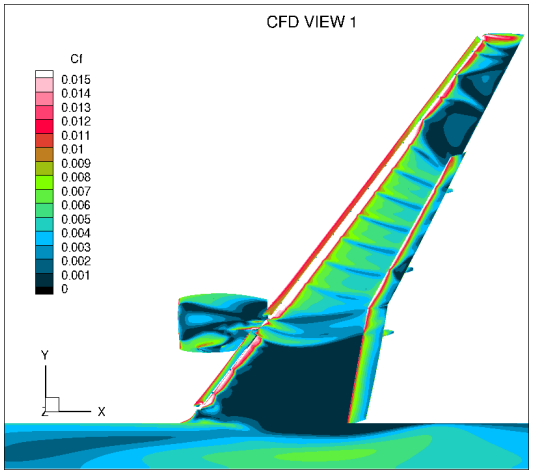

(e) zero order warm start

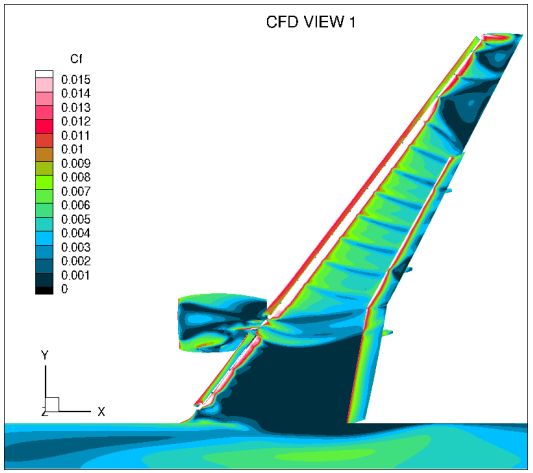

(f) first order warm start

Surface friction coefficients Increasing α.

CASE 2A - Level A Skin Friction

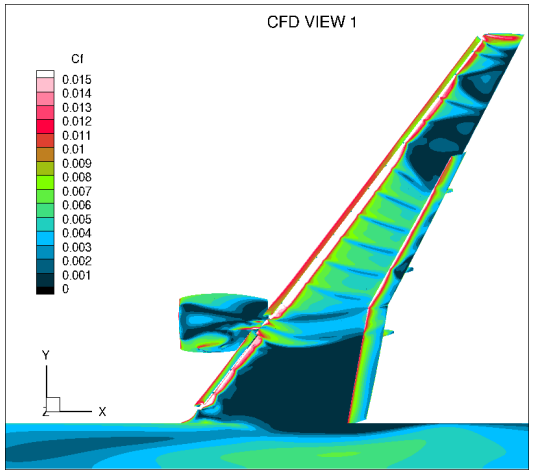

(a) $\alpha = 19.57^{\circ}$, cold start

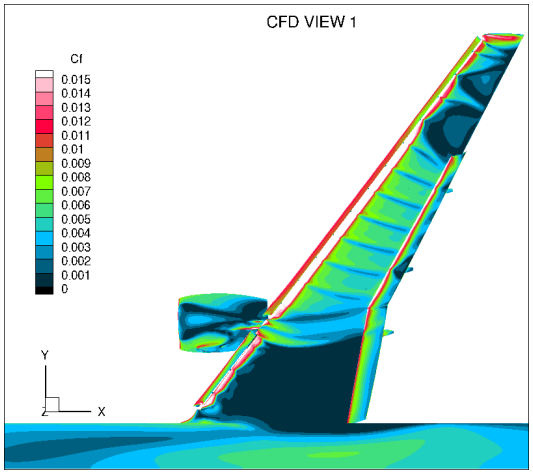

(b) zero order warm start

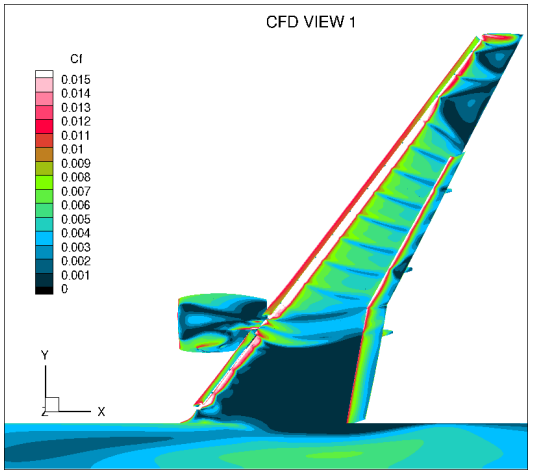

(c) first order warm start

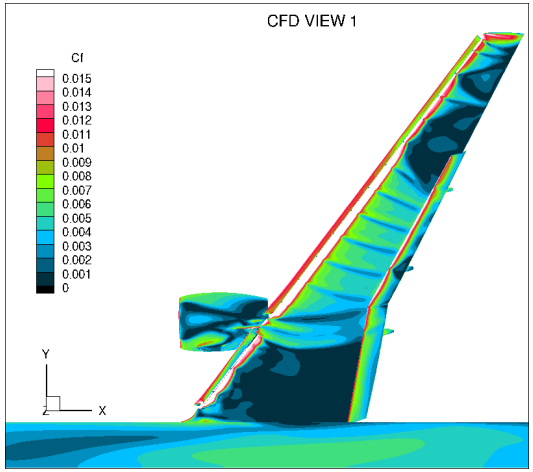

(d) $\alpha = 20.55^{\circ}$, cold start

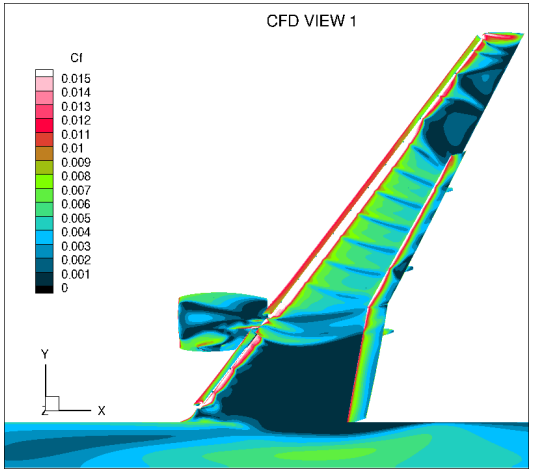

(e) zero order warm start

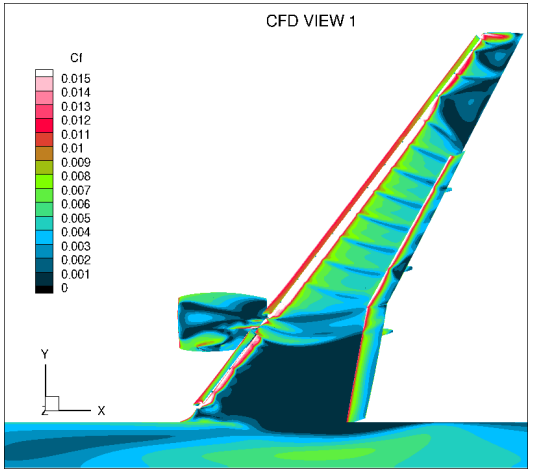

(f) first order warm start

Surface friction coefficients Decreasing α.

Conclusion

Case 3 :

- Standard Spalart-Allmaras turbulence model is verified ;
- Solution in line with the reference (FUN3D) are obtained for the family 2, but a significant difference is obtained with family 1 ;
- Grid quality and refinement make a difference, even on this simple 2D case.

Case 1b :

- A 300 million cells fixed grid is still too coarse to obtain a monotonic convergence ;
- Very similar solutions are obtained between the grid level B and C for the full polar (Case 2a).

Case 2a :

- Solution initialization has a large impact on the solutions ;
- Using a first-order extrapolation warm-start might be a robust way of doing these simulations ;
- Better convergence are required to assess the possible multiple solutions.

Acknowledgements

Computations were performed on Compute Canada/Calcul Québec Beluga and Narval clusters.