3rd Geometry and Mesh Generation Workshop
4th CFD High Lift Prediction Workshop

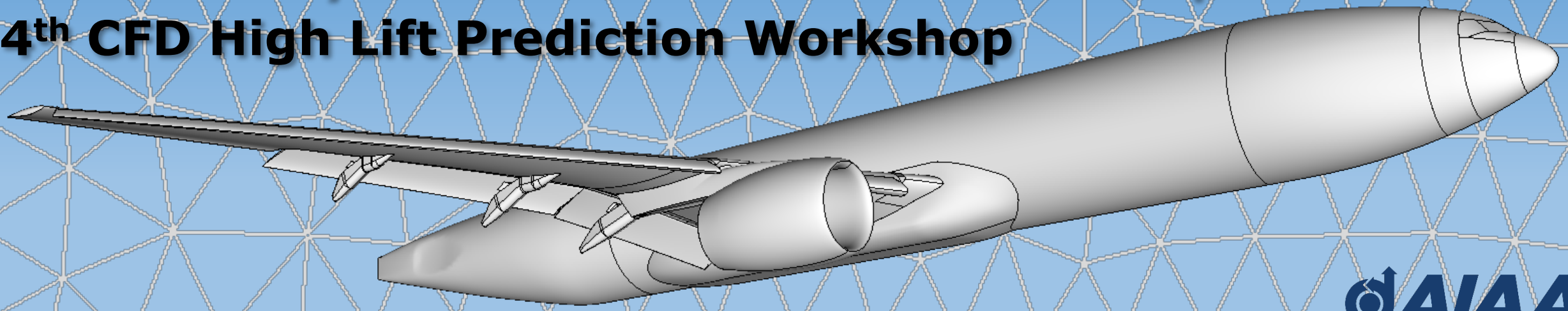

Geometry Modeling TFG

M Gammon
N Taylor
J Dannenhoffer
Doug Lacy
Adam Clark
Bill Jones

Team Details

TFG ID/Name
G = Geometry
R = RANS
A = Adaptation
H = High-order
L = Hybrid RANS/LES
W = WMLES/LB

TFG Name	Geometry
Number of Active Participants (current)	4
Number of Observers (current)	1

Group ID	Members	Tools Used (Geom/Grid/Solver), by name
G-010	Airbus	(Observer)
G-013	NASA Ames	(withdrew)
G-016	BETA CAE Systems	ANSA / ANSA / -
G-018	ESI-OpenCFD Ltd.	- / ESI Visual Mesh (surface), snappyHexMesh (volume) / openFOAM
G-020	KHI	Rhinoceros / Cflow (in-house) / -
G-021	SIEMENS Digital Ind.	Simcenter Star CCM+ & Simcenter 3D/(ditto)/-

Key Questions

#	Key Question	Addressed By Which Groups (PID)	Adequately answered with supporting evidence?
1	What problems are encountered when building a CFD model from its various isolated constituent component geometry files?	G-016, G-021	Yes (but, potentially augmented via critical review/analysis of committee preparation)
2	What geometry-related surface meshing issues are encountered when meshing complex CFD geometries?	G-016; G-018; G-020, G-021	Yes
3	What are the difficulties in using 3D scan data of a physical model in the CFD mesh generation workflow?	G-016	Yes (but, potentially augmented via critical review/analysis of NASA JF Team experience)

Background

- HL-CRM-WT data was supplied in two STEP files (see AIAA 2019-3460):
  - 1273592_crm_wing_37flap_30slat.stp (89MB)
    - An assembly of the main element, LE slat, TE flaps and associated hardware in the same configuration as studied during GMGW-1 / HLPW-3
      (456 bodies, 39.5k faces)

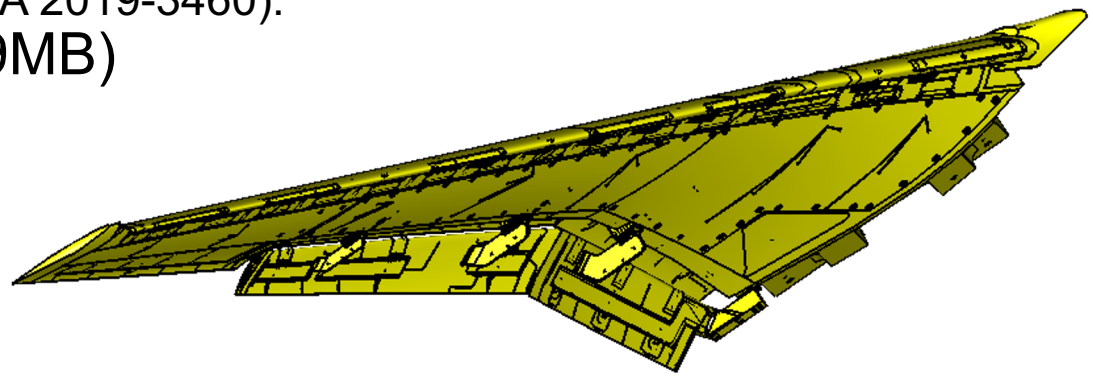

  - 123597_fueselage-skins_assy_ams.stp (131MB)
    - An assembly of the fuselage skin and basic wing support structure
      (169 bodies, 7.8k faces)

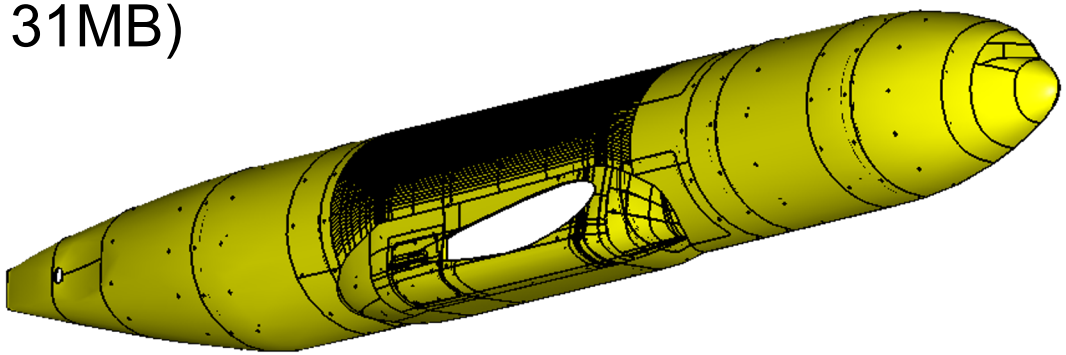

- GMGW3 goal – build a CFD model to closely represent actual WT geometry

Challenges to address key questions

KQ #1

Challenge **A:** Build the CRM-HL

Challenge **B**: Build deflected flap cases

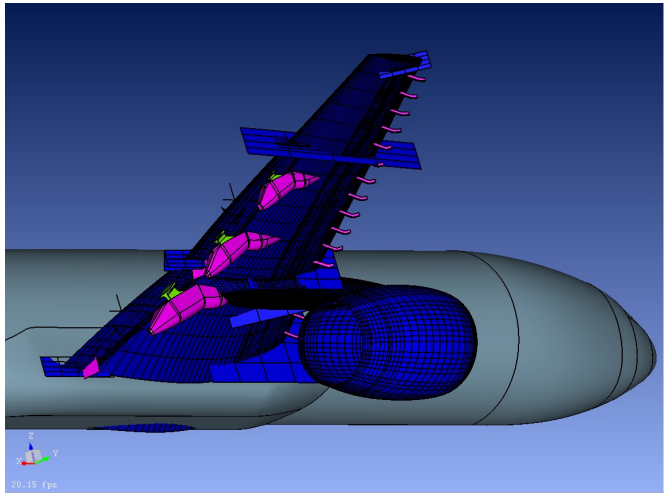

KQ #2

Challenge **C**: OML-related mesh generation problems

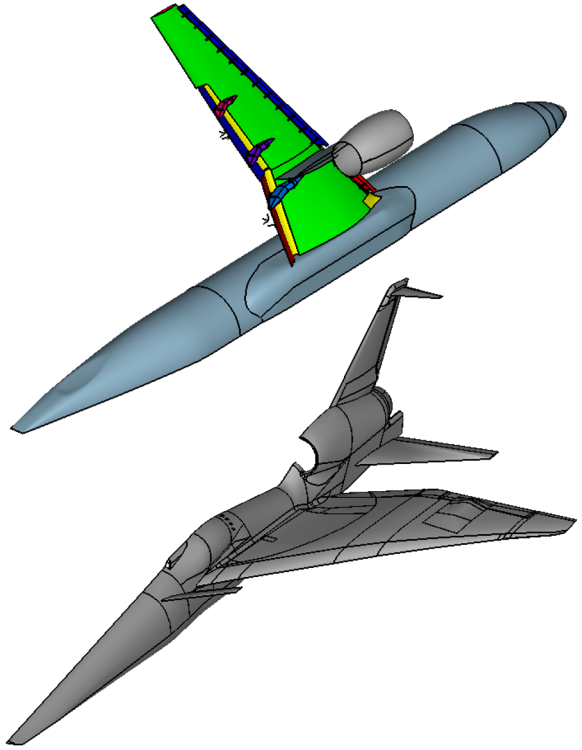

KQ #3

Challenge **D:** Generating a surface mesh incorporating 3D scan data

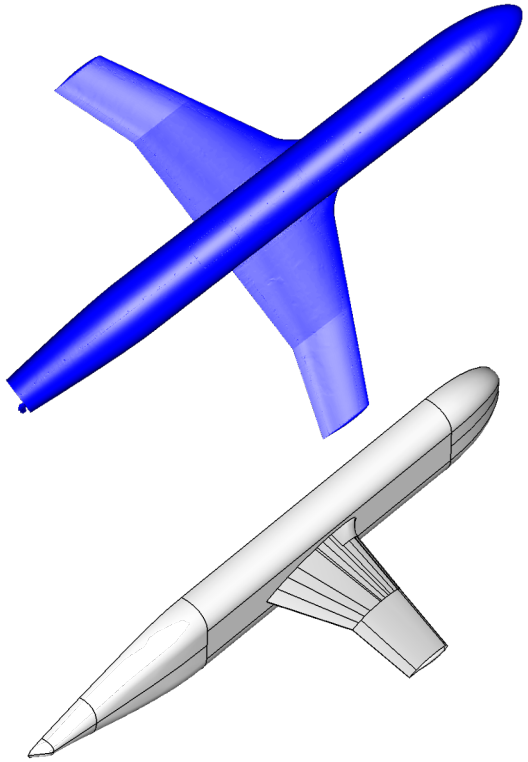

Terminology

Degenerate NURBS Surface

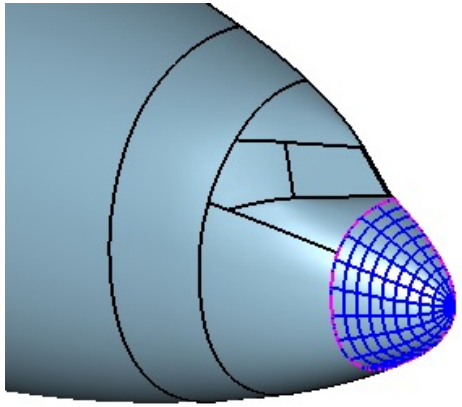

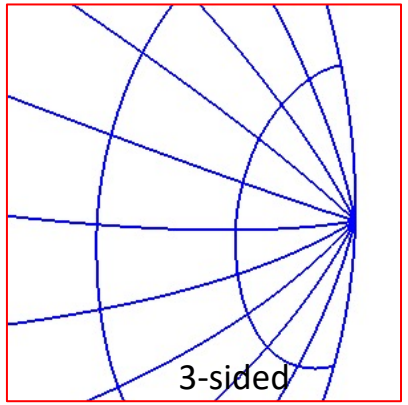

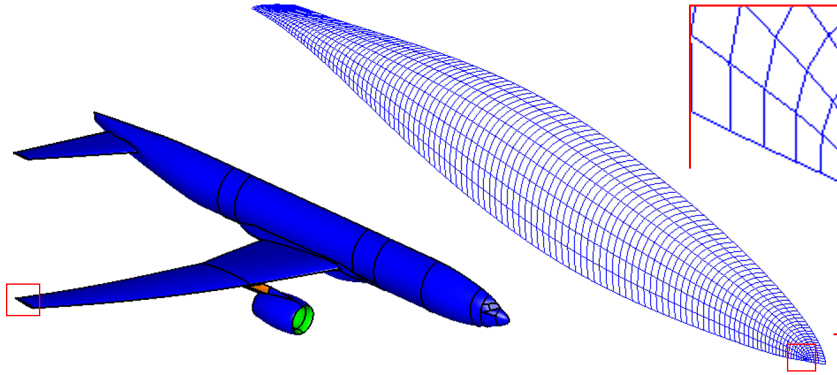

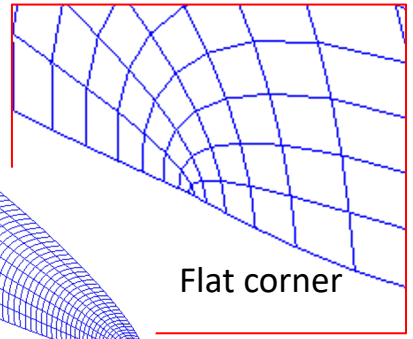

Bottom-up vs top-down meshing

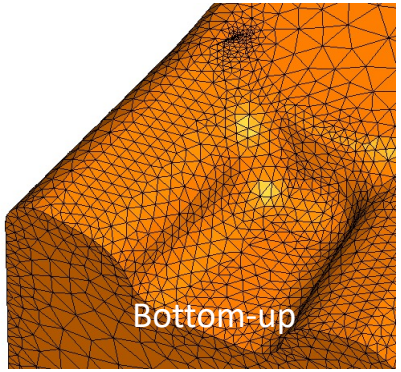

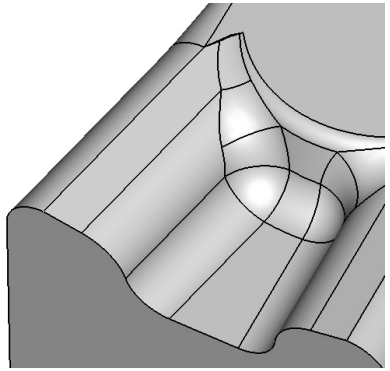

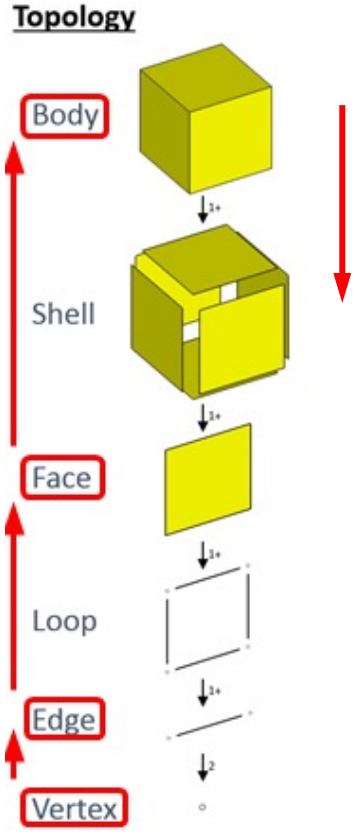

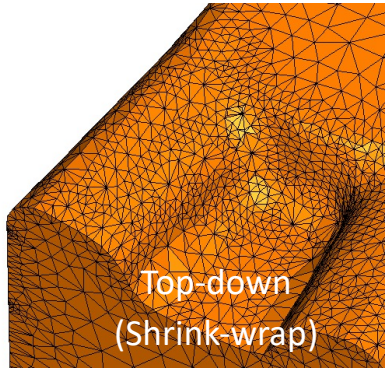

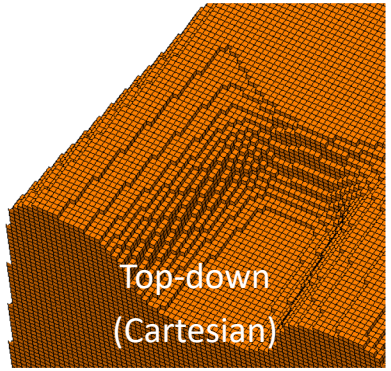

Terminology

Virtual Topology

A mechanism for suppressing geometrically irrelevant topology during surface meshing – implementations vary

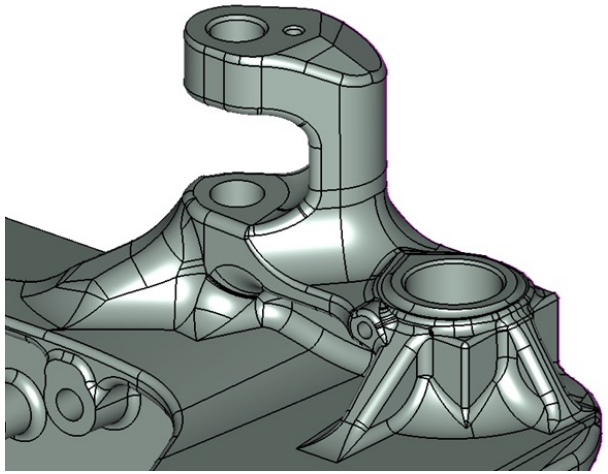

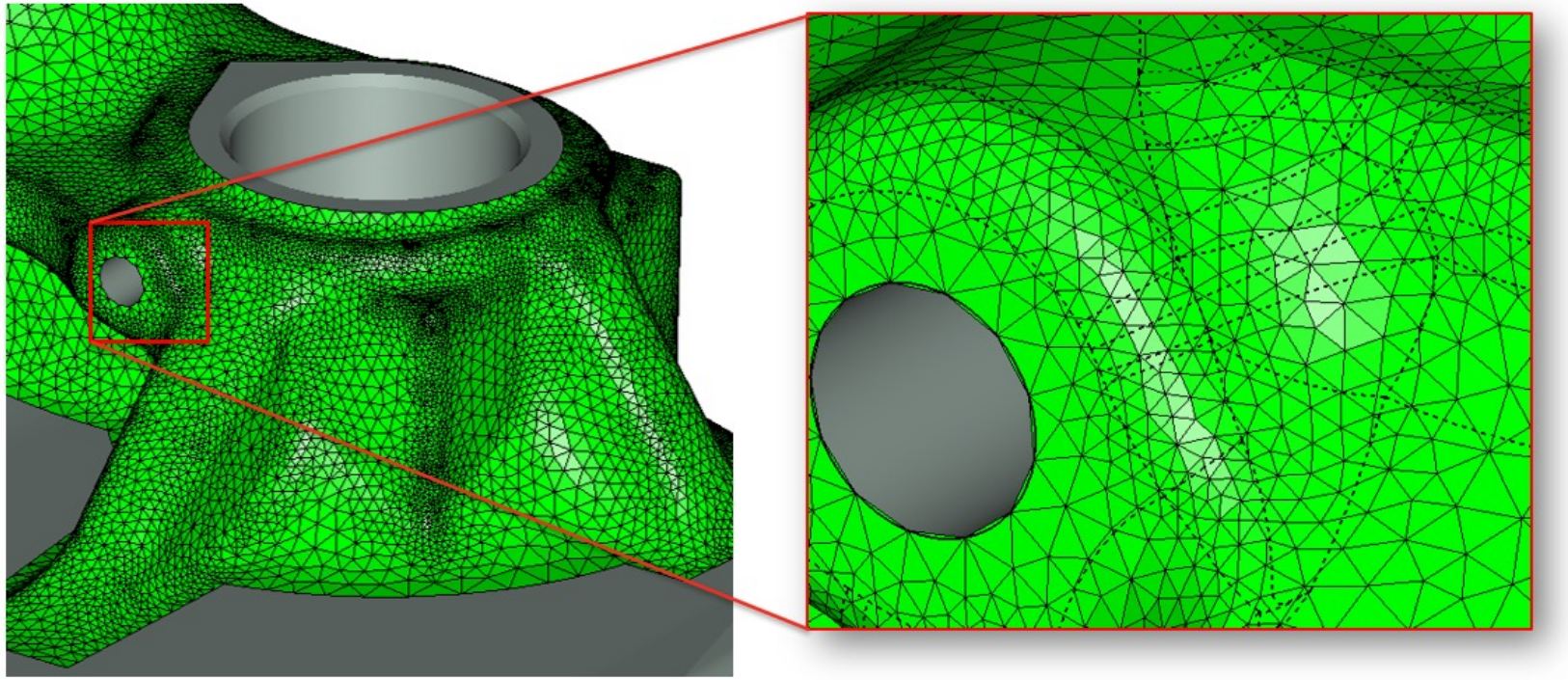

Key Findings / Lessons Learned

KQ #1	What problems are encountered when building a CFD model from its various isolated constituent component geometry files?

Key Findings / Lessons Learned

- Findings:

- Limited uptake (2 participants: G-016, G-021, 1 observer: G-010)
- Challenge A: (G-010, observer) piecemeal construction of CFD models not done, master parametric model created in MCAD system
- Challenge A: (G-016)
    - WUSS/Wing overlap – trimmed back (by eye) but small gap appears 0.06
    - FTF canoe openings – create blends from edges, intersect with brackets
    - Nacelle left as closed NURBS
    - Mark-up (splits) normally introduced at LEs (at peak curvature)
    - Wing tip degenerate NURBS split tip-to-tail (for mark-up) – cut-line tricky due to degeneracy, create curve and project
- Challenge A: (G-021)
    - Lack of solid bodies caused a lot of complications and increased time taken significantly
    - Flap/slat deployment positions as wireframe entities were not read from STEP file by default – workaround needed
    - Flap cove surface was difficult to integrate due to irregular cut-outs that needed to be removed
    - Nacelle closed surface did not import cleanly – workaround needed
    - Degenerate NURBS surface at wing tip was refitted/replaced due to poor initial mesh
- Challenge B: (G-016) FTF/lower wing intersection differs – small gaps with wing filled with additional surfaces
- Challenge B: (G-021) Deployed flap positions differ from committee models. Minor issues from feature history updating needed re-work

Key Findings / Lessons Learned

KQ #1	What problems are encountered when building a CFD model from its various isolated constituent component geometry files?

Key Findings / Lessons Learned

- Lessons Learned:

- WUSS/Wing tangential connection
  - Took time to trim to leave an acceptable compromise gap – non-automated
  - NB: Committee build also struggled to arrive at suitable geometry here
- Degenerate NURBS surfaces at wing-tips cause issues
  - Manual topological mark-up (splits) or refitting needed – non-auto
- Piecemeal surface-based construction
  - Not representative of some industrial workflows, parametric MCAD preferred.
  - Solid body geometry preferred for ease of assembly (Boolean unite, etc)
  - Surface edits can be harder that solid body edits (G-021)
- Defining deployment positions
  - Coordinate systems, wireframe axes, surface axes, etc… not supported consistently by mesh tooling
- Topological mark-up (splits)
  - Introduction of edges on wing, slats, flaps and nacelle, but best location? Manual insertion needed – non-automated
  - Primary reason to drive mesh alignment and sizing controls and for post-processing
  - NB: topological mark-up does not change geometry

Supporting Evidence

KQ #1	What problems are encountered when building a CFD model from its various isolated constituent component geometry files?

G-016

Challenge A

Original CAD

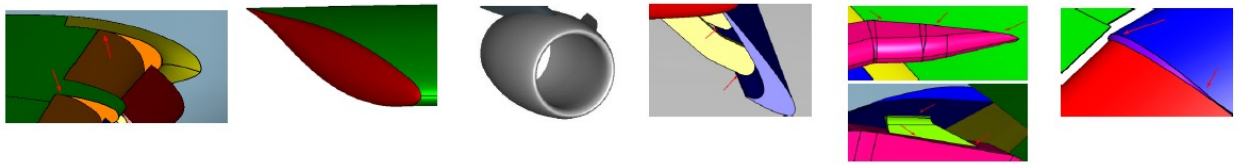

ANSA final geometry

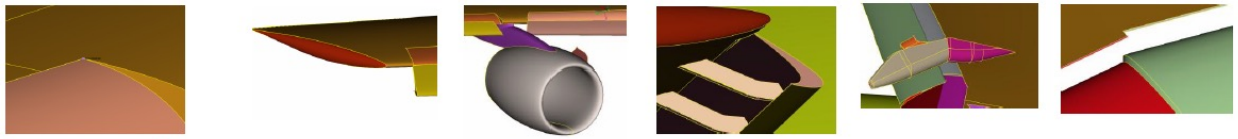

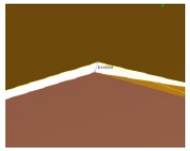

WUSS was trimmed exactly at retracted slat position. A small gap of 0.06 inches is covered by topology. Any small "jump" in surface best represents the actual step that exists in the real model

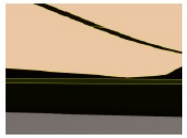

No gap was closed to ensure the exact representation of the real geometry (at a cost of increased mesh cell counts to resolve all such proximities)

Challenge B

All three flap positions have been topologically connected in one ANSA file and every configuration can be set as active at a click of a button from the Model Browser

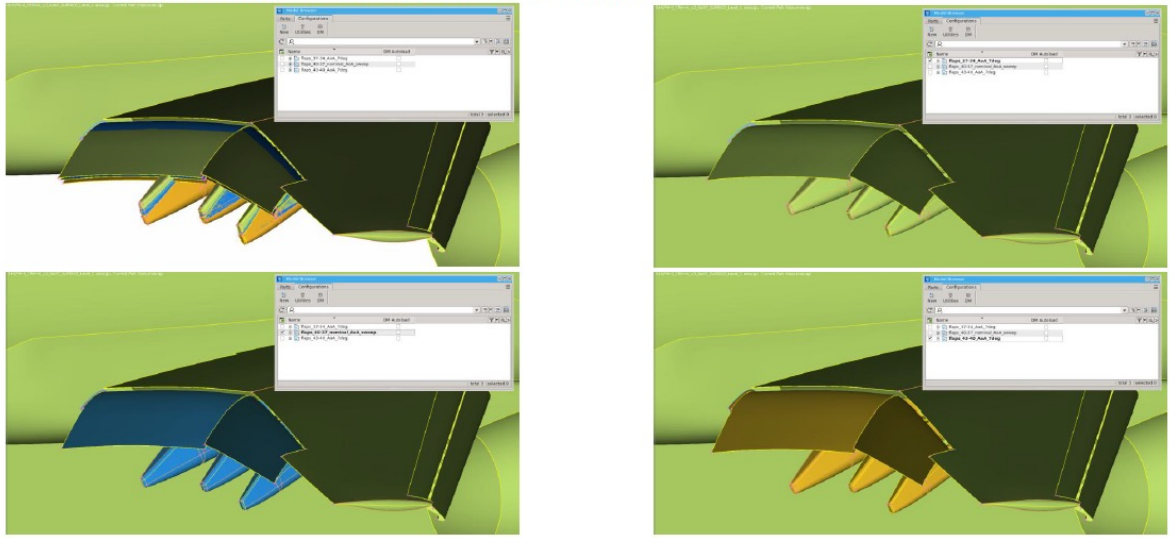

Comparison to committee model

KQ #1	What problems are encountered when building a CFD model from its various isolated constituent component geometry files?

		Points	Err>10^0 in	Err>10^{-1} in	Err>10^{-2} in	Err>10^{-3} in
Committee	37-34	727,675	4	5	5	5
	40-37	741,842	4	5	5	5
	43-40	728,754	4	5	5	5
G-016	37-34	416,068	5	5	1,051	1,646
	40-37	444,495	5	5	1,055	1,669
	43-40	445,766	5	5	1,041	1,643
G-021	37-34	468,470	64,424	98,098	106,209	115,916
	40-37	465,836	5,137	11,197	19,986	31,341
	43-40	467,475	25,964	90,613	102,899	112,275

Comparison to committee model

KQ #1	What problems are encountered when building a CFD model from its various isolated constituent component geometry files?

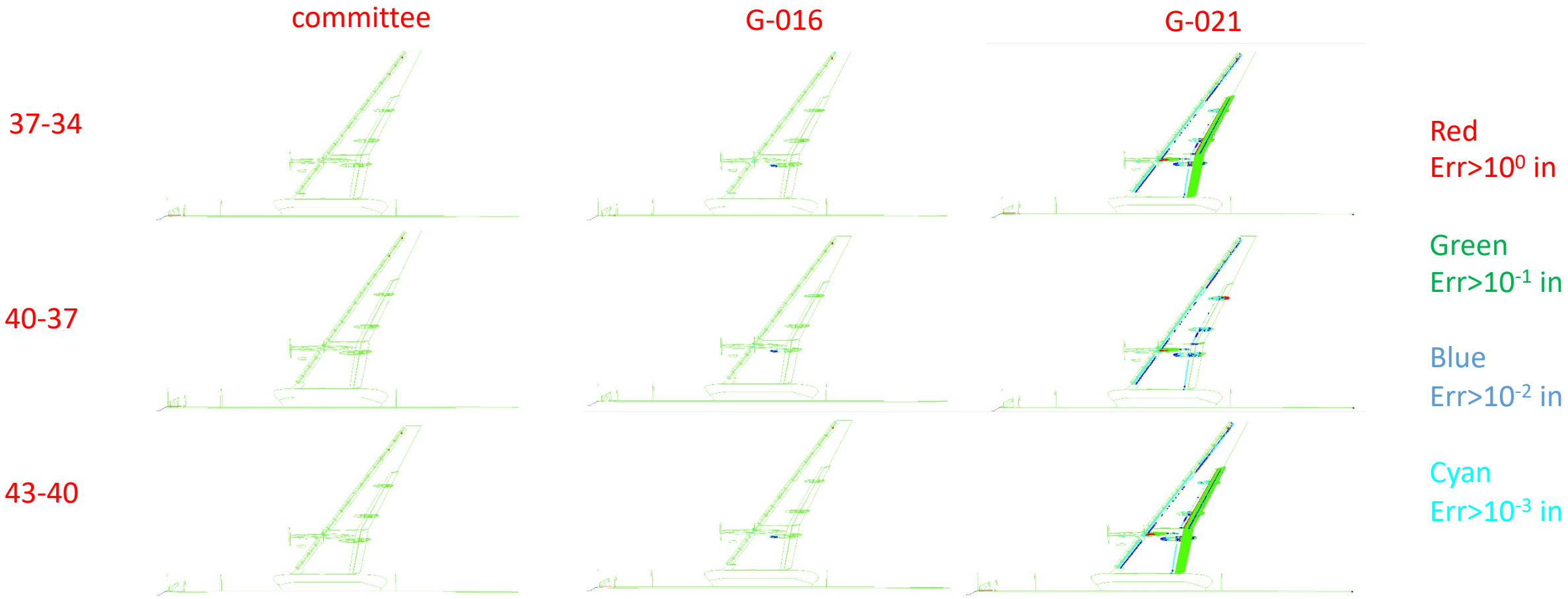

Comparison to committee model

KQ #1	What problems are encountered when building a CFD model from its various isolated constituent component geometry files?

G-016

Trim-curve accuracy
Max: 0.029 inch vs 0.037 inch (committee)
FSF and wingtip

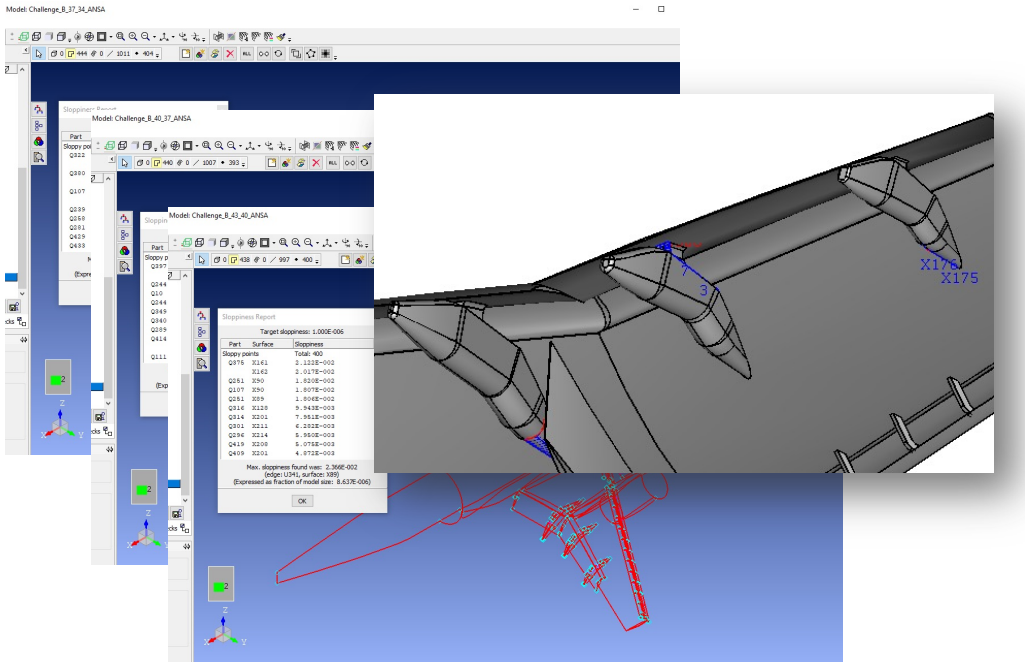

Wingtip trailing edge curvature lost, gap 0.02

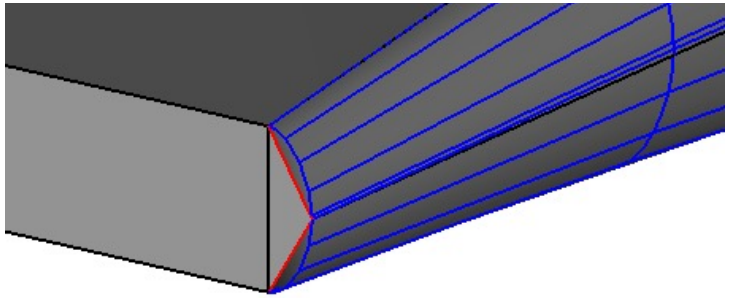

Discontinuous curve with 90 degree kink

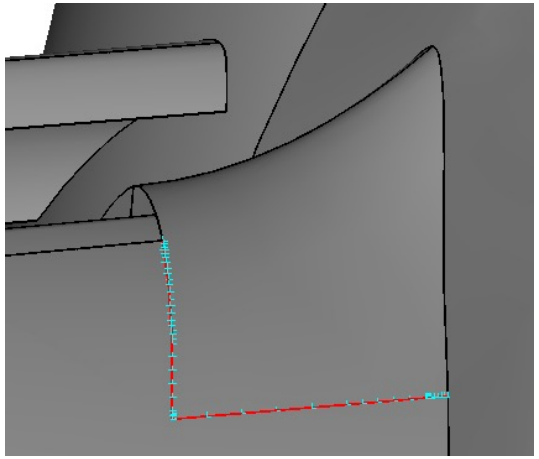

Supporting Evidence

KQ #1	What problems are encountered when building a CFD model from its various isolated constituent component geometry files?

G-021

Challenge A

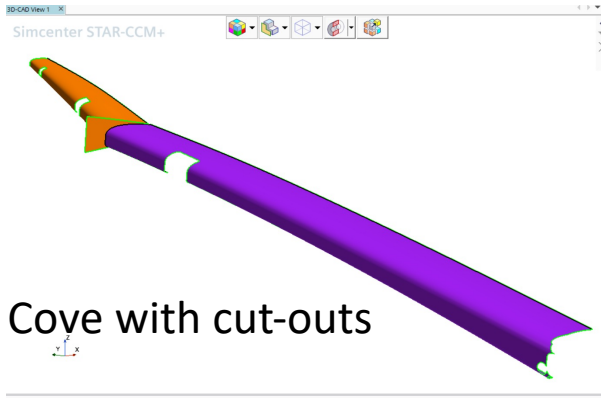

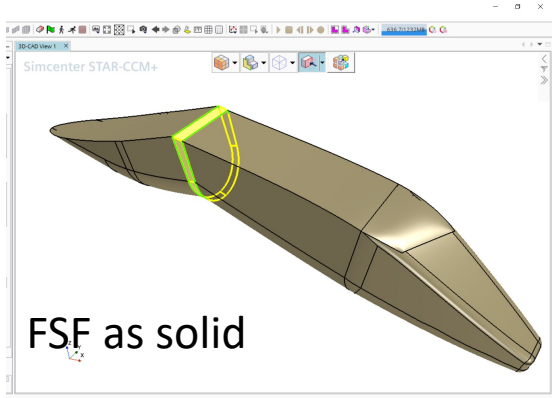

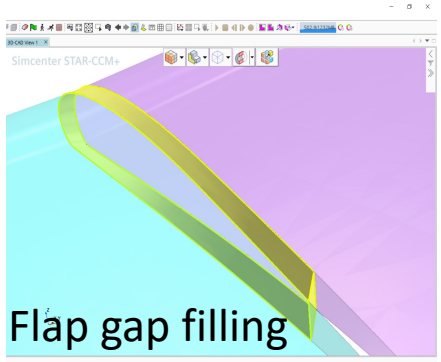

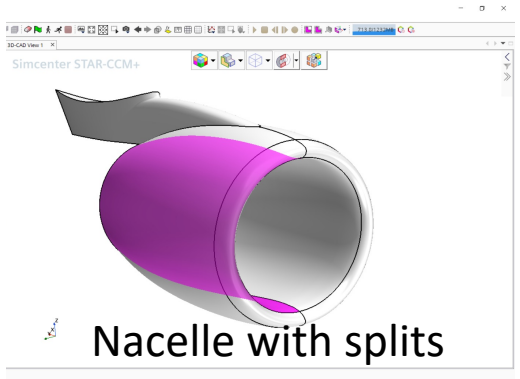

Challenge B

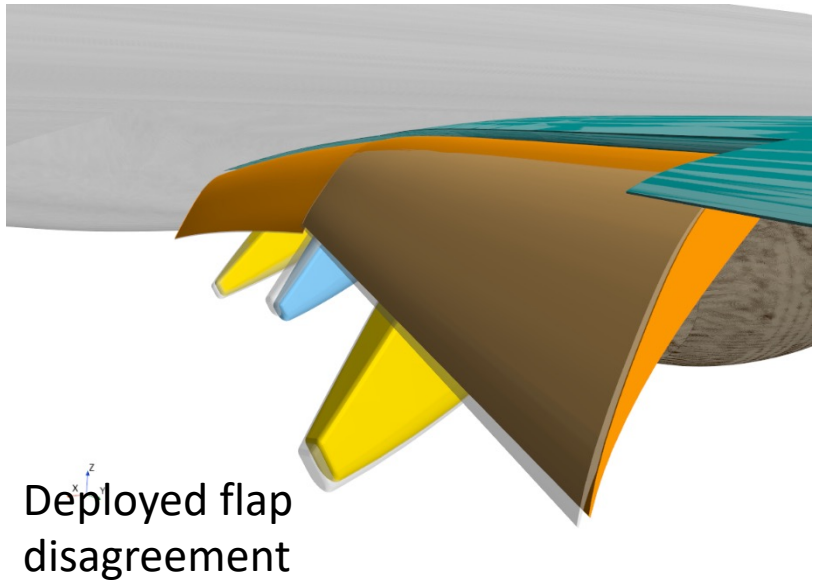

Comparison to committee model

KQ #1	What problems are encountered when building a CFD model from its various isolated constituent component geometry files?

G-021

Challenge A

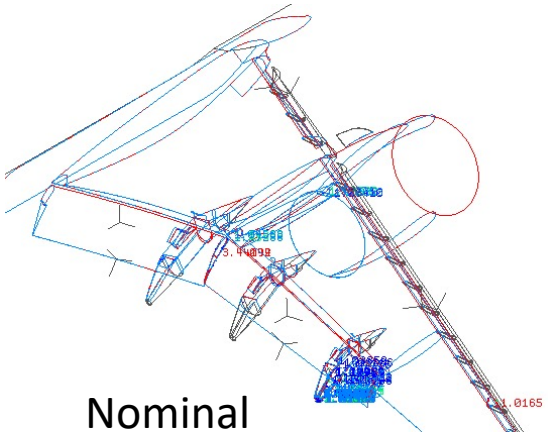

Nominal

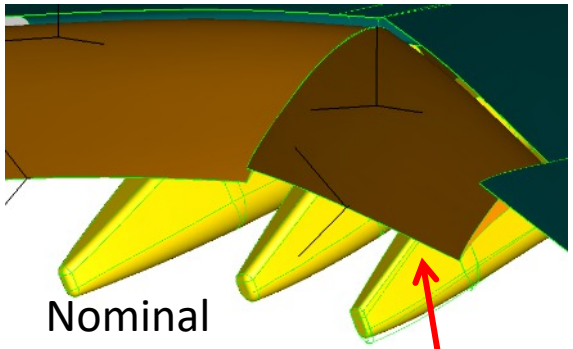

Nominal

Outboard FSF mismatch due to committee rotated more for larger gap with flap

Challenge B

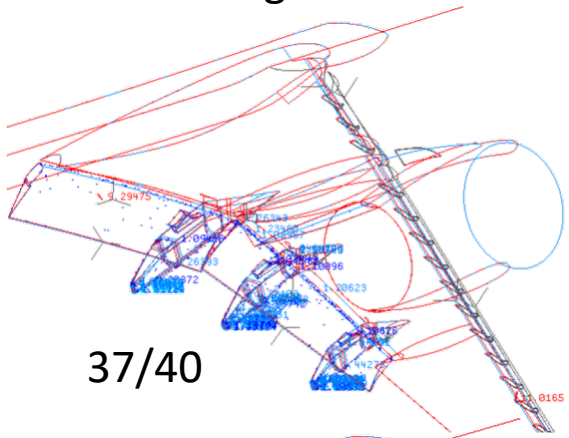

37/40

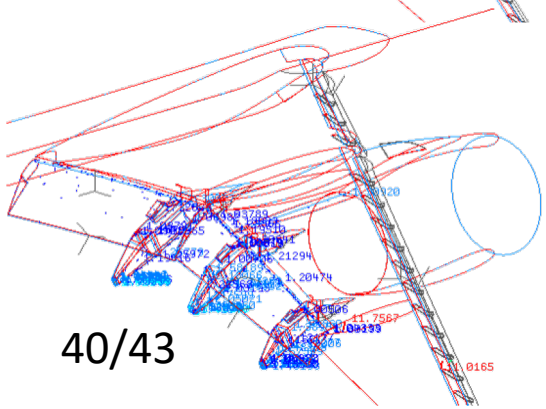

40/43

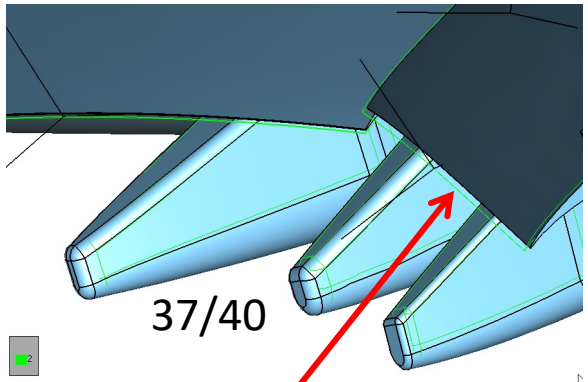

37/40

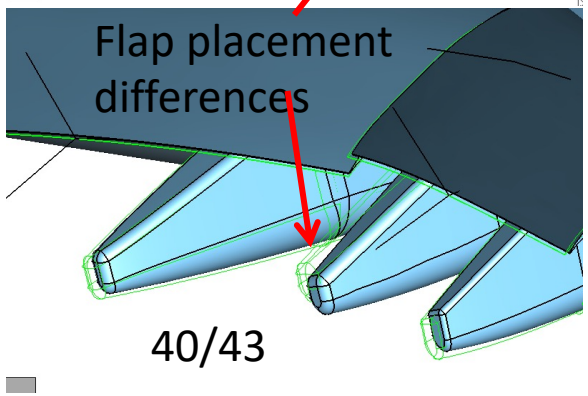

Flap placement differences

40/43

Comparison to committee model

KQ #1	What problems are encountered when building a CFD model from its various isolated constituent component geometry files?

G-021

Trim-curve accuracy
Max: 0.144 inch vs 0.037 inch (committee)
FSF junction

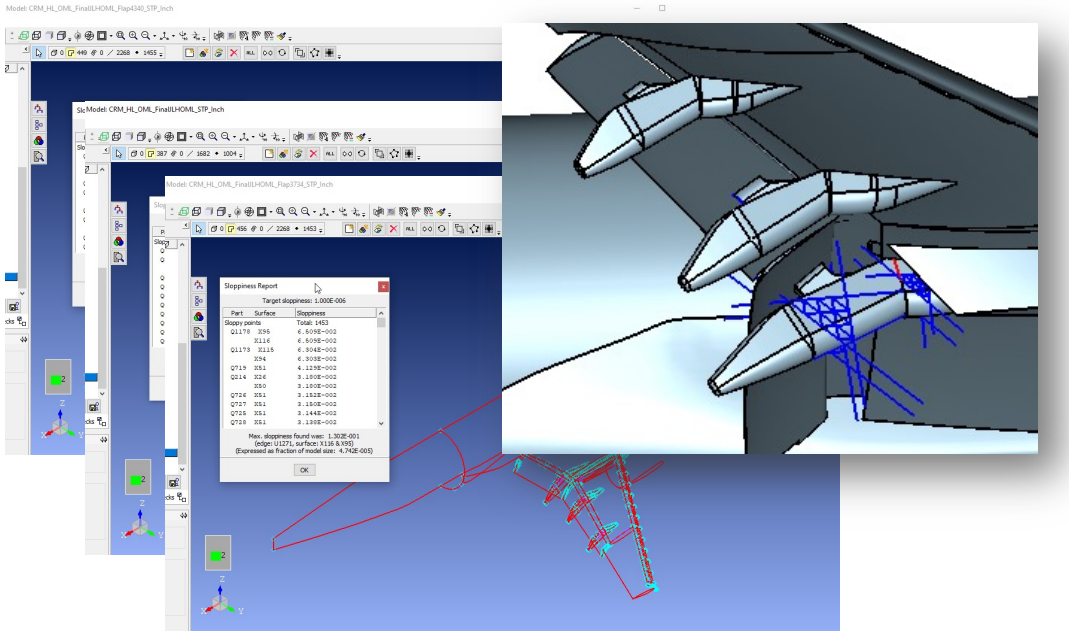

Highly fragmented edges:
2591 edges vs 1126

Very short edges:
8 < 0.0275

WUSS end-wall pinched
at wing junction
step 0.06

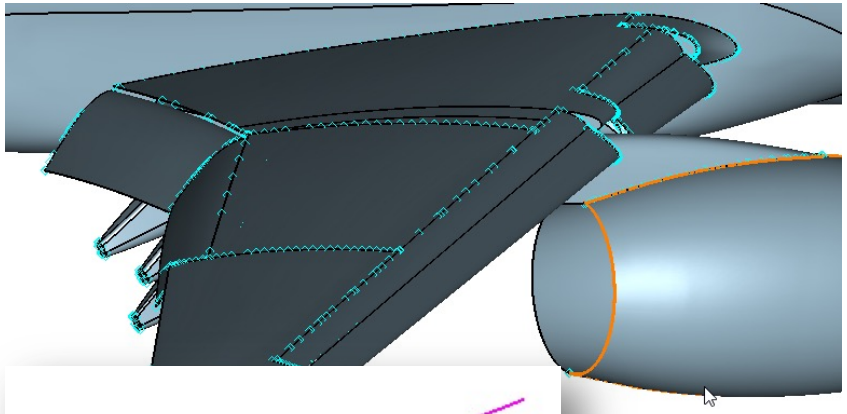

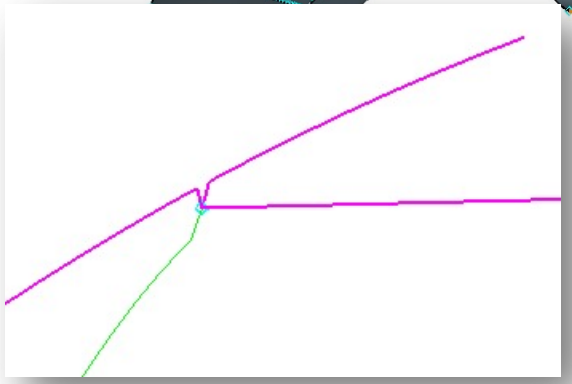

Key Findings / Lessons Learned

KQ #2	What geometry-related surface meshing issues are encountered when meshing complex CFD geometries?

Key Findings / Lessons Learned

- Findings:

- G-016: generated committee meshes – bottom-up mesher
  - CRM-HL: Main wing TE false curvature sensor problems – replaced face
  - CRM-HL: Slat bracket gap – reduce element size to very low sizes
  - SB: no significant meshing issues reported. Manual mesh sizing used around vortex generators
- G-018: (CRM-HL only): - bottom-up surf mesher – top-down volume mesher
  - Additional LE surface mark-up (splits) added – topology modified to better align mesh
  - “mapped meshing” to capture high curvature at LEs – mesh sizing controls to better align mesh
  - Octree snapped to surface mesh
  - Rescaling to metric units caused some short edges to collapse – solution: convert to SI before discretizing
- G-020: (CRM-HL only): - top-down mesher
  - In-house mesh tooling supports automated surface mesh smoothing (corner-rounding; slat bracket fixture gaps);
  - Additional blocks inserted in less-narrow gaps (slat/wing junction)
- G-021: (CRM-HL only) – bottom-up mesher, isotropic meshes only
  - Initial surface mesh generated automatically from basic global sizing
  - Manual sizing refinement needed on WUSS end walls, flap/slap brackets, flap gap and FSF/wing junctions due to surface proximity issues
  - Prism growth on TE was challenging due to robustness overrides (mesher tuned for more complexity, e.g. under-hood)

Key Findings / Lessons Learned

KQ #2	What geometry-related surface meshing issues are encountered when meshing complex CFD geometries?

Key Findings / Lessons Learned

- Lessons Learned:

- Topological mark-up (splits)
  - Edges introduced at LEs to improve mesh alignment and sizing
  - Some additional edges also beneficial to further localize quality (G-018)
- Narrow gaps in the OML
  - Bottom-up no serious issues, but cost was very small cells – slat brackets
  - A challenge for top-down meshers (G-020), gaps had to be pre-filled
- Mesh sizing
  - Automatic global settings get 1st mesh reliably
  - Some manual intervention needed to iterate and refine tricky regions

Supporting Evidence

KQ #2	What geometry-related surface meshing issues are encountered when meshing complex CFD geometries?

G-016

Challenge C

Quad dominant fully automatic meshing with anisotropic leading and trailing edges for the CRM model (2.5 million shell elements)

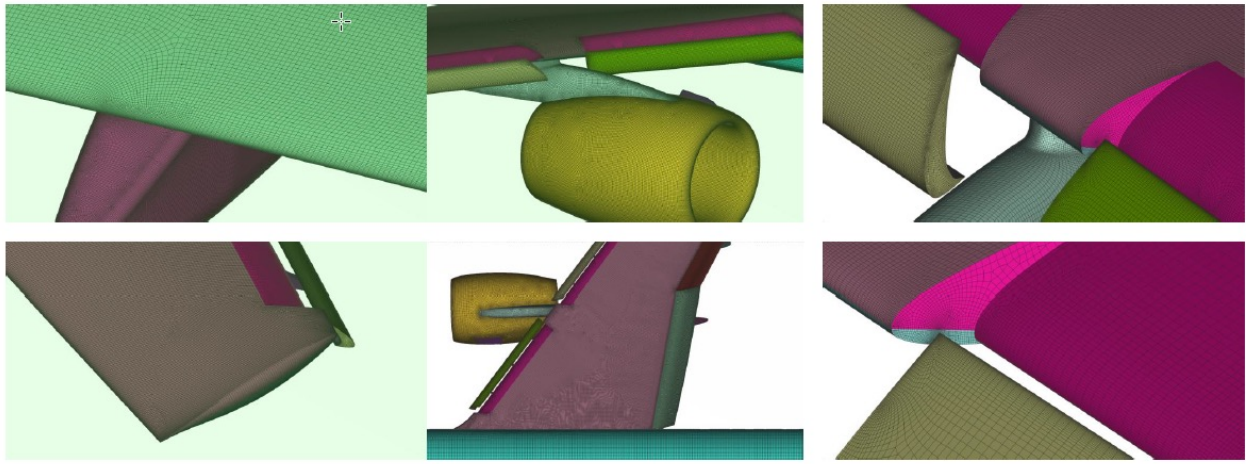

Challenge C

Quad dominant fully automatic meshing with anisotropic leading and trailing edges for the sonic boom model (740k shell elements)

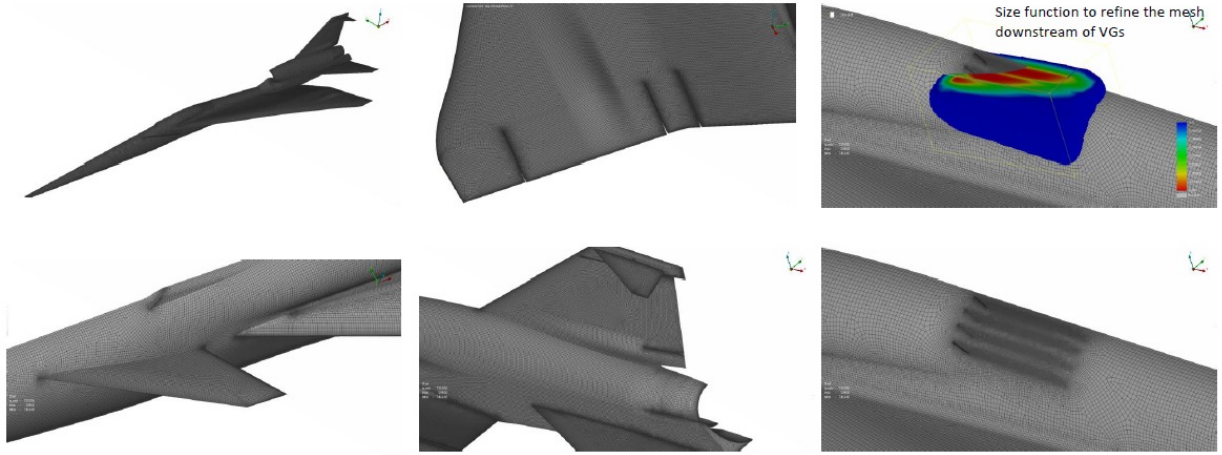

Supporting Evidence

KQ #2	What geometry-related surface meshing issues are encountered when meshing complex CFD geometries?

G-018

Wing

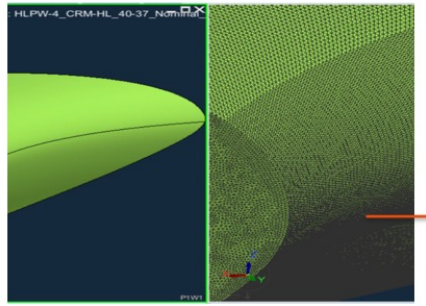

Mapped Mesh

Slat

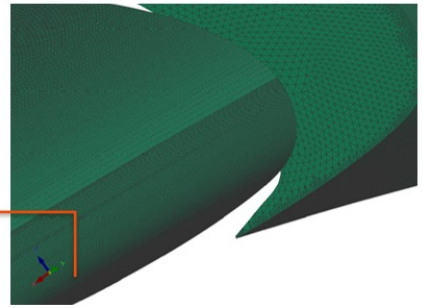

- To capture the curvature (e.g., leading edges of Wing & slat), we typically need mapped mesh, which could be done by defining additional vertex while defining surface mesh topology in Visual Mesh.
- A swept geometry can cause difficulties to capture such mapped topology and we need to split the CAD to achieve the same (next slide)

FLAP

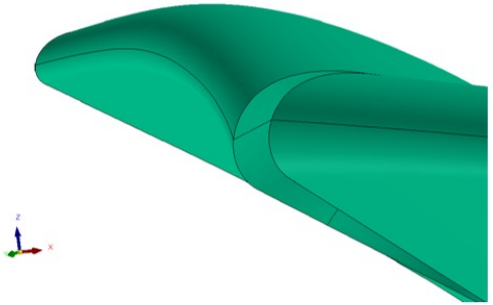

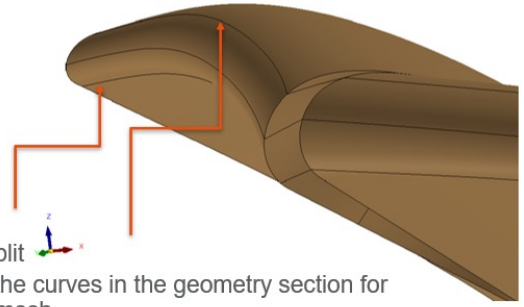

- CAD is split
- Splitting the curves in the geometry section for mapped mesh
- Basically, to Identify the leading edge of FLAP region

Supporting Evidence

KQ #2	What geometry-related surface meshing issues are encountered when meshing complex CFD geometries?

G-020

7. Flap/Flap partial gap closure
   - IB and OB flaps should be joined over first ~30% of their chord only using the supplied trim surface
   - What approach did you use to construct the partial closure?
   - How did you decide on the shape and size of the closure?

   For the flap deflection angle 37/34, we added blocks to fill the narrow gaps.

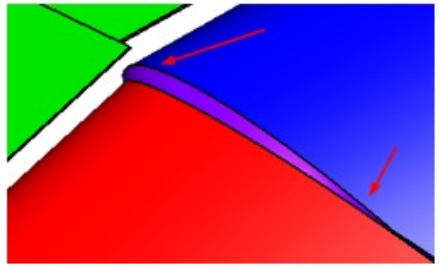

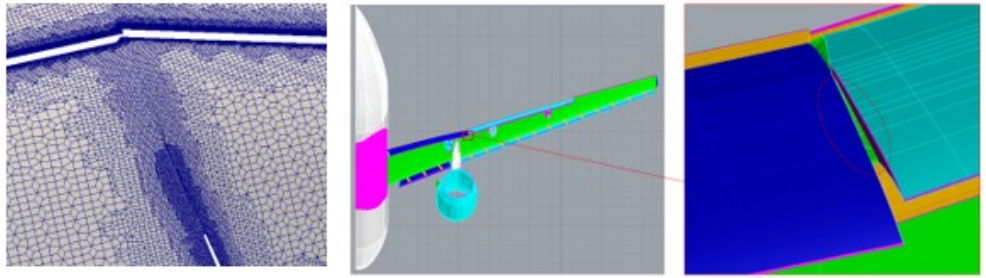

10. Wing/slat bracket
    - Any modification required in this area, if so describe changes made and why?

    A: We added blocks to fill the gaps.

    B, C: No modifications.

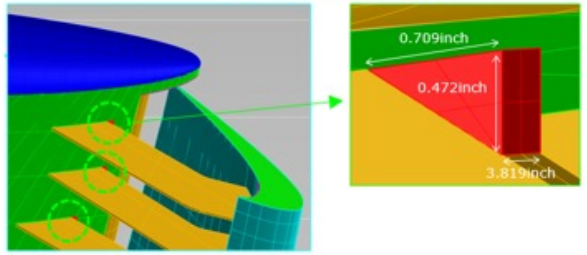

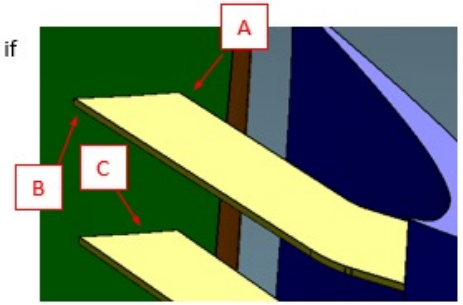

14. What other modifications/tweaks were made, once a valid closed model had been built, to support mesh generation and/or post-processing, for example:

    We added blocks to fill the gaps.

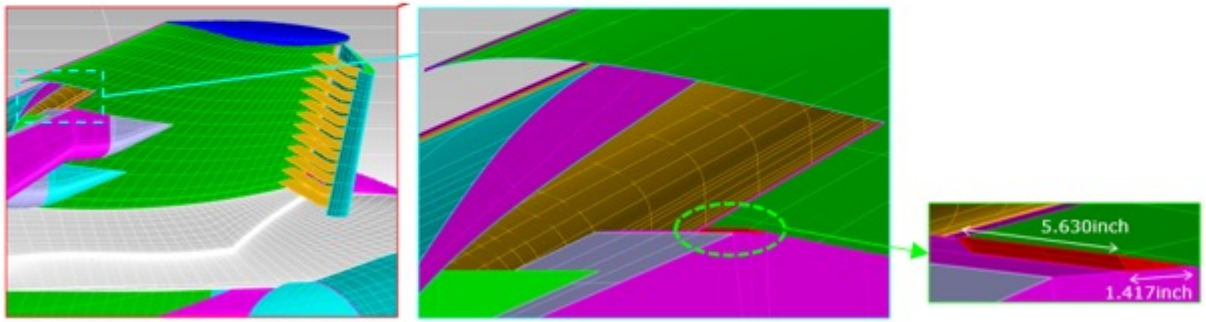

Supporting Evidence

KQ #2	What geometry-related surface meshing issues are encountered when meshing complex CFD geometries?

G-021

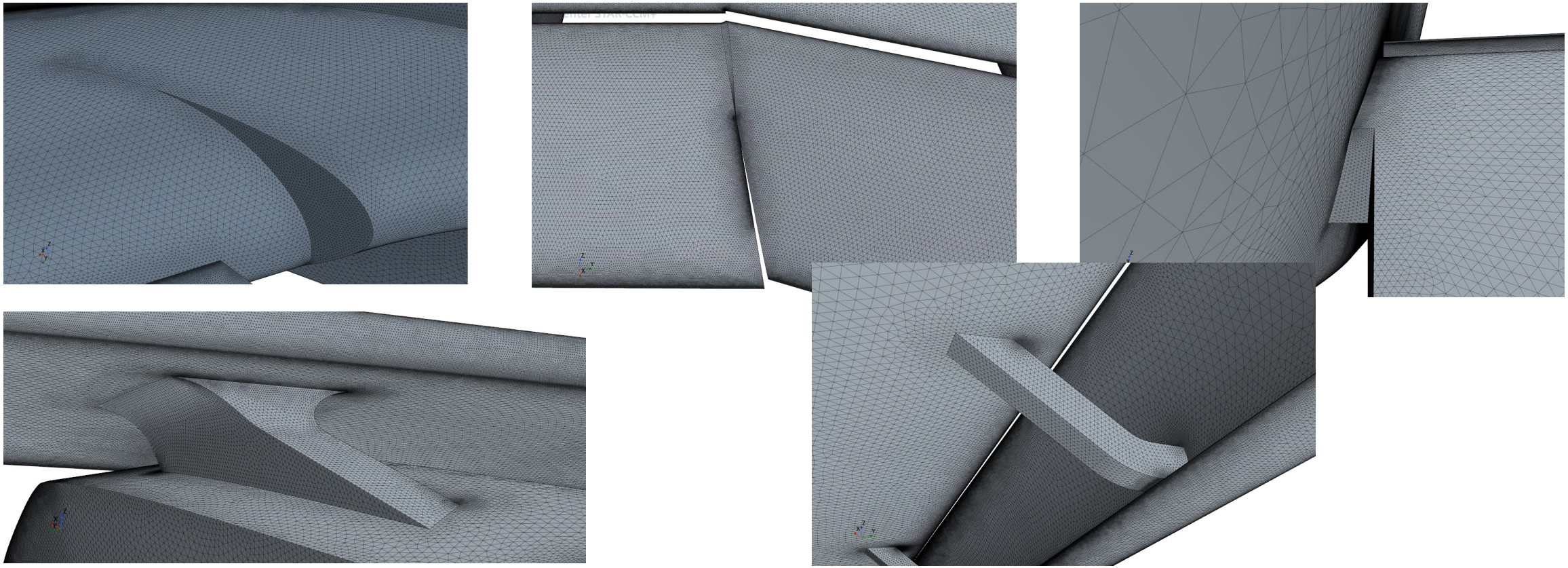

Key Findings / Lessons Learned

KQ #3	What are the difficulties in using 3D scan data of a physical model in the CFD mesh generation workflow?

Key Findings / Lessons Learned

- Findings:

- Limited uptake (2 participant, G-016)
- Challenge D: (G-016)
    - STL/STEP axes systems differ (180deg in x);
    - Compared distances – one wing tip deformed more than other – non-symmetric
    - STL very messy, not closed, will be manual
    - Wings not symmetrical;

- Lessons Learned:

- Initial facet reduction for performance at cost of loss of detail
- Manual STL closures needed, time consuming
- Shrinkwrap mesher, or similar top-down mesher needed, i.e. not bottom-up mesher because no MCAD topology to start from

Supporting Evidence

KQ #3	What are the difficulties in using 3D scan data of a physical model in the CFD mesh generation workflow?

G-016

Challenge D

Large openings were closed manually (red areas)

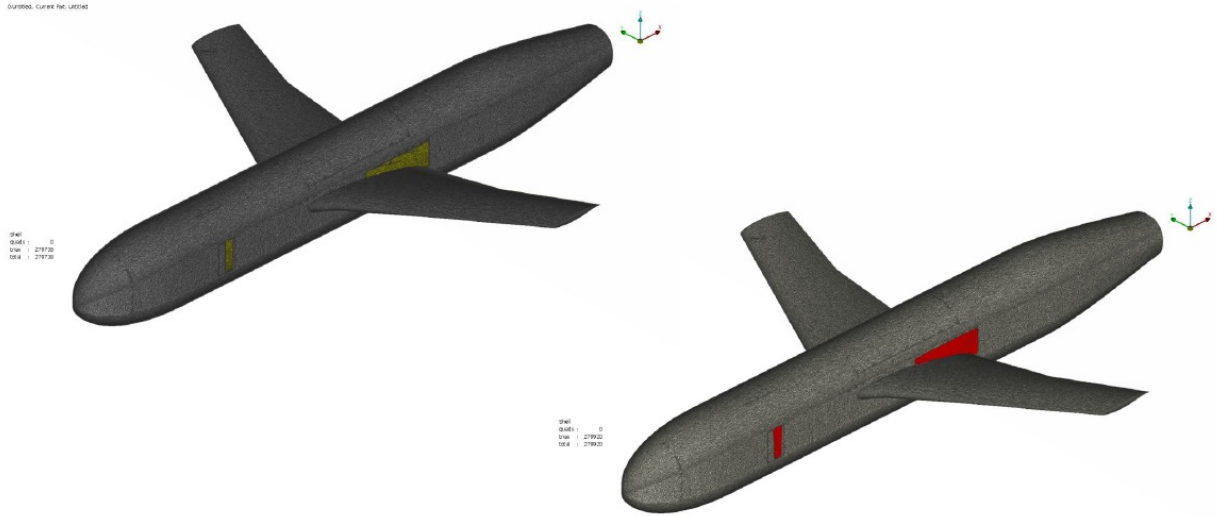

Challenge D

Tessellated set of data could only be addressed efficiently with Surface Wrapping tool.

STL model coarsened from 6.7 million to 280k shells (with controlled max deviation from original data).

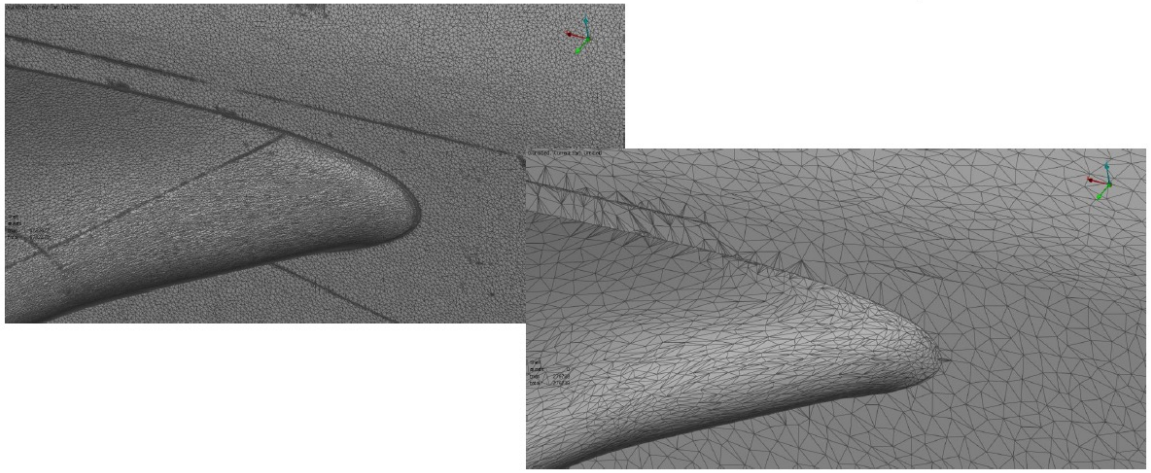

Non-participant PQ Analysis - Preliminary

- 12 submissions received
- Geometry:
  - Import File Types: STEP(4), IGES(6), STL(1), surface mesh(1)
  - Import problems / time: 4 (3 STEP-related, 0 IGES related) / seconds to 40min (max)
  - Mesh pre-processing time (hrs): 1 to 28
  - Re-work required after meshing: Yes = 7 ; No = 5
  - Level of expertise required: Beginner = 2; Intermediate = 7; Advanced = 2; (1 nil response)
- Meshes:
  - Surface:
    - Element type: Triangular (4), Quad (2), Quad dominant (3), Other (2); (1 nil response)
    - Generation time (hrs): Human = 0.1 – 250 (max) ; Computer: seconds – 60 (max)
  - Volume:
    - Type: Hybrid (3), Structured (2), Unstructured (4), High-Order (2); Other (1)
    - Generation time (hrs): Human = 0 – 200 (max) ; Computer: seconds – 25 (max); Export time: seconds – 10 min (max)
  - Output format: AFLR3 (1), CGNS (4), GPH (1), HDF5 (1), MEM-COM (1), PLOT3D (1), UGRID (3); N/A (not dumped to file) (1)
  - Level of expertise required to build family: Beginner = 1; Intermediate = 6; Advanced = 4; (1 nil response)
  - Comments: various pertaining to choice of metrics, ability to meet committee-supplied guidelines and strategy for building mesh families. Further analysis required to consolidate our understanding.

Future Plans

- What elements of current KQs need further investigation to answer?
  - 3D scan challenge needs further effort, more participants

- What new KQs are being proposed and why?
  - How do parametric CAD workflows deal with mesh failures
  - Is virtual/surrogate topology a “magic wand”, etc…
  - Challenges for generating chimera meshes; unique surface meshing needs – holes, mapped quads?
  - Challenges when making very low density meshes, e.g. for higher order, Euler solvers

- What additional CFD or test data is required for support the KQs?
  - Potential challenges arising from adaptive mesh refinement (e.g. mesh element size approaching geometric tolerance)
  - Potential challenges associated with higher order methods (e.g. greater scrutiny applied to surface curvature etc)

- What additional help is required from the organizing committee to maximize learning?
  - Getting PQs still a challenge. Can their submission be requested earlier in the process (e.g. as a pre-requisite for data submission)?