3rd Geometry and Mesh Generation Workshop
4th CFD High Lift Prediction Workshop

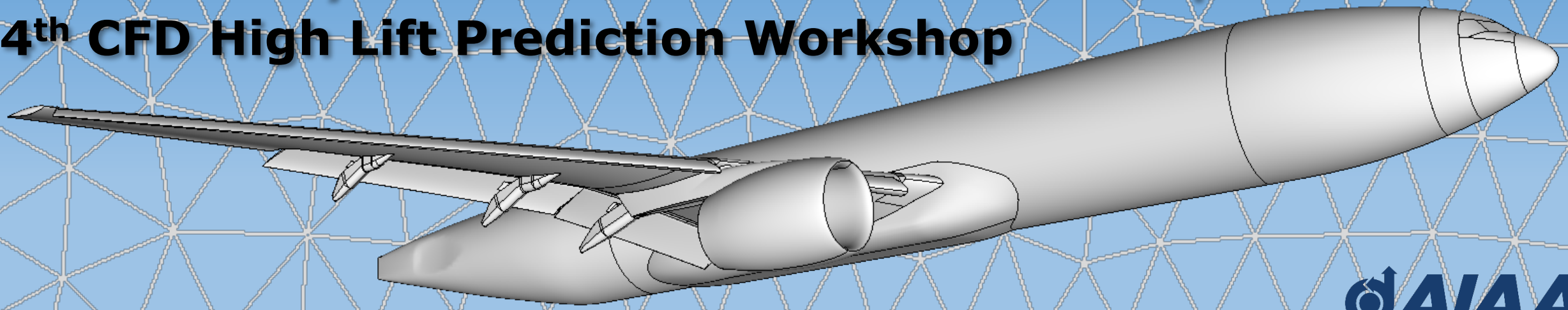

Mesh Adaptation for RANS TFG

Mike Park (NASA)
Todd Michal (Boeing)
Frederic Alauzet (INRIA)

Terminology

- **Multiple solutions** is where converged CFD solutions are dependent on initial conditions (complicated by coarse mesh, history encoded in adapted mesh, and incomplete iterative convergence)
- **Multiscale metric** is a method to control estimated interpolation error in a scalar field, typically Mach number
- **Goal-based metric** is a method to control estimated error in an output (e.g., Lift, Drag)
- **Complexity** is a measure of a metric that can provide a sharp estimate of the adapted mesh size (number of vertices)
- **Complexity continuation** is holding angle of attack fixed to create a series of adapted meshes with increasing complexity (mesh convergence study)
- **Angle of attack continuation** is holding the complexity or the mesh fixed and increasing angle of attack (encourage a particular solution from multiple possible solutions)

Team Details

TFG ID/Name
G = Geometry
R = RANS
A = Adaptation
H = High-order
L = Hybrid RANS/LES
W = WMLES/LB

TFG Name	Mesh Adaptation for RANS
Number of Active Participants	8
Number of Observers	8

Best practice PID submission in bold

Members (by PID)	Tools Used (Geom/Grid/Solver), by name	case1a	case1b	case2a	case2b	case3
A-002	Wolf/Feflo.a(lift)		x	x		x
A-004.1	FUN3D-FV/refine(multiscale)	x	x	x		x
A-004.2	FUN3D-SFE/refine(multiscale)		x	x		x
A-004.3	FUN3D-FV/refine(multiscale) medium mesh			x		
A-004.4	FUN3D-FV/refine(multiscale) coarse mesh			x		
A-013.1	SANS on TMR meshes					x
A-013.2	SANS/EPIC(drag)					x
A-025.1	GGNS/EPIC(multiscale)	x	x	x		
A-025.2	GGNS/EPIC(drag)	x	x	x		
A-026	HEMLAB/PyAMG(multiscale)	x	x	x		x
A-031	COFFE/refine(multiscale)		x	x		

Key Questions

#	Key Question	Addressed By Which Groups (GID)	Adequately answered with supporting evidence?
1	Can adaptive mesh convergence be achieved on the full HLCRM model across the angle of attack range?	A-002, A-004, A-025, A-026, A-031	Partial
2	What are the best practices/lessons learned and outstanding technical issues for adaptive mesh modeling of high-lift applications (e.g., error estimate choice, flow solver settings, complexity schedule, solution continuation, geometry handling)?	All	Yes
3	Can the causes of multiple solutions and techniques to encourage the “desired” branch be identified (e.g., incomplete iterative convergence, discretization error, initial conditions, solver settings)?	All	Partial
4	Where can mesh adapted RANS contribute to prediction of high-lift flow physics?	All	Yes

Key Findings / Lessons Learned

KQ 1	Can adaptive mesh convergence be achieved on the full HLCRM model across the angle of attack range?

Key Findings / Lessons Learned

- Verification for case3
- Complexity continuation for case1b
- Angle of attack continuation at multiple complexities for case2b

Supporting Evidence

KQ 1	Can adaptive mesh convergence be achieved on the full HLCRM model across the angle of attack range?

- Verification case has fostered nonlinear flow solver and mesh adaptation research
- AIAA-2020-3219, AIAA-2020-3220, AIAA-2021-1080, AIAAJ

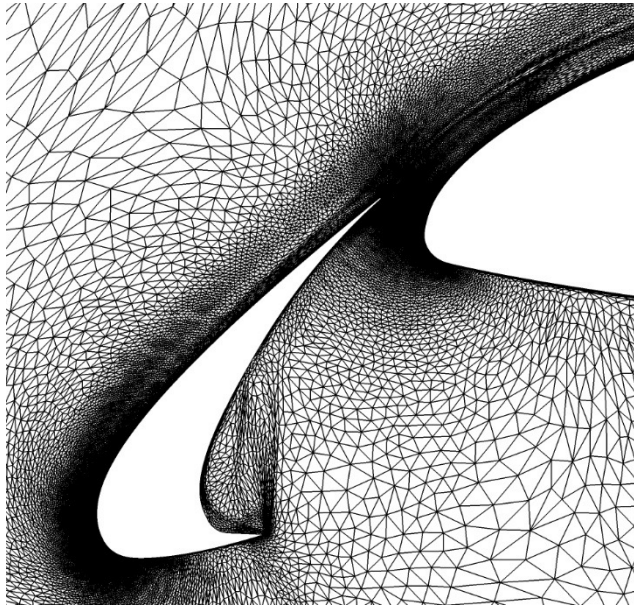

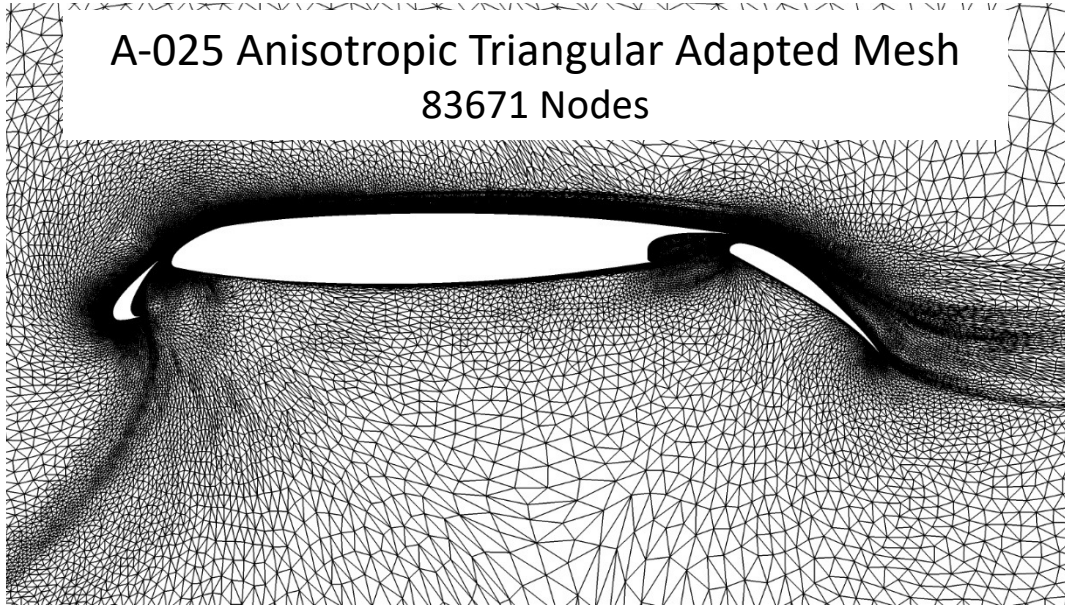

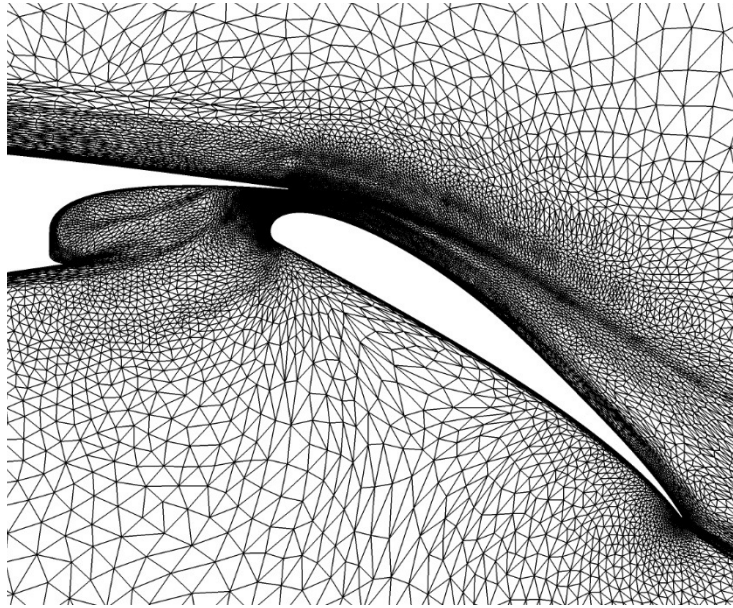

Supporting Evidence

KQ 1	Can adaptive mesh convergence be achieved on the full HLCRM model across the angle of attack range?

- Verification case3

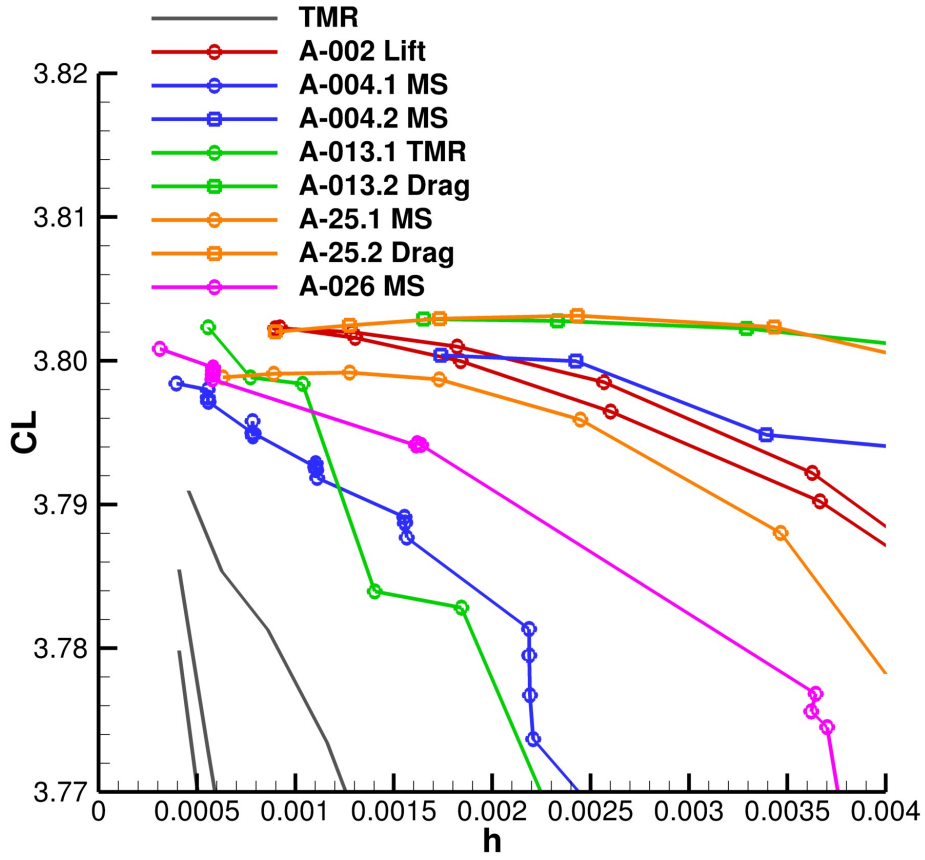

Ranges have tightened since summer progress meeting

$h = N^{-1/2}$

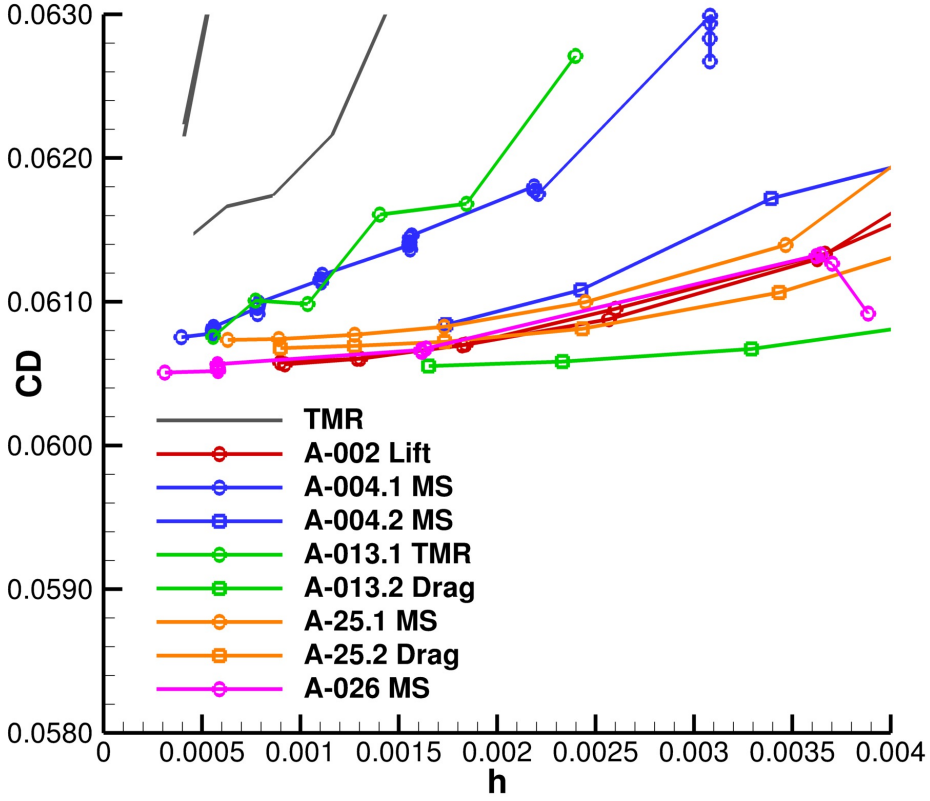

Supporting Evidence

KQ 1	Can adaptive mesh convergence be achieved on the full HLCRM model across the angle of attack range?

- Final solution for complexity continuation at 7.05° case1b (SA)
  - 3 different solvers, metrics, remeshers

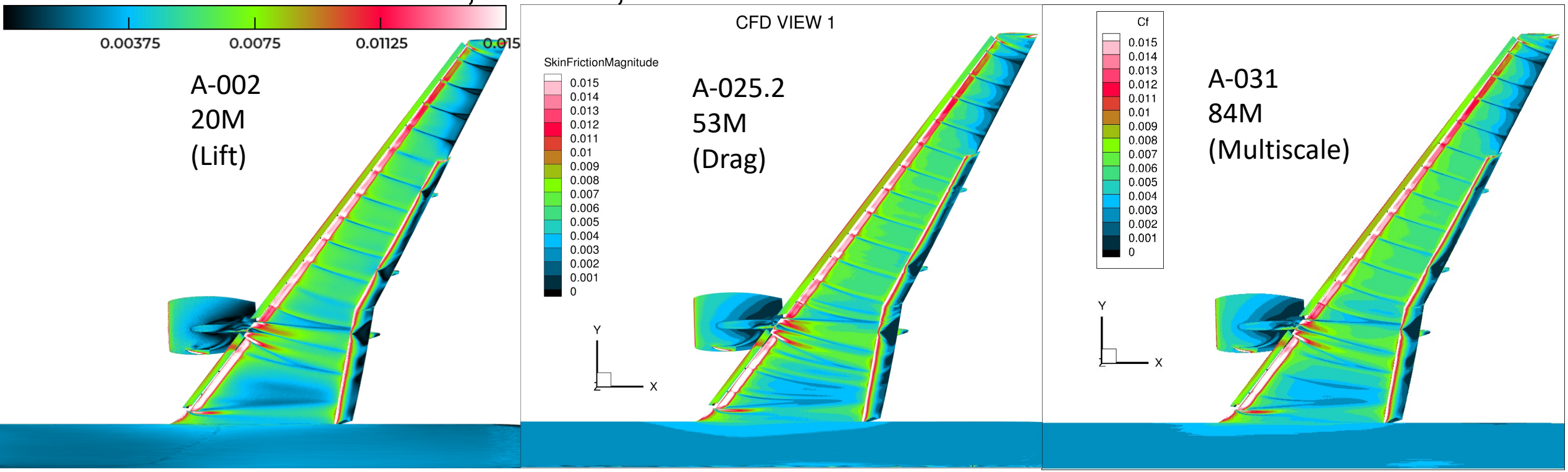

Supporting Evidence

KQ 1	Can adaptive mesh convergence be achieved on the full HLCRM model across the angle of attack range?

- Final solution for complexity continuation at 7.05° case1b (SA)
  - 3 different solvers, metrics, remeshers

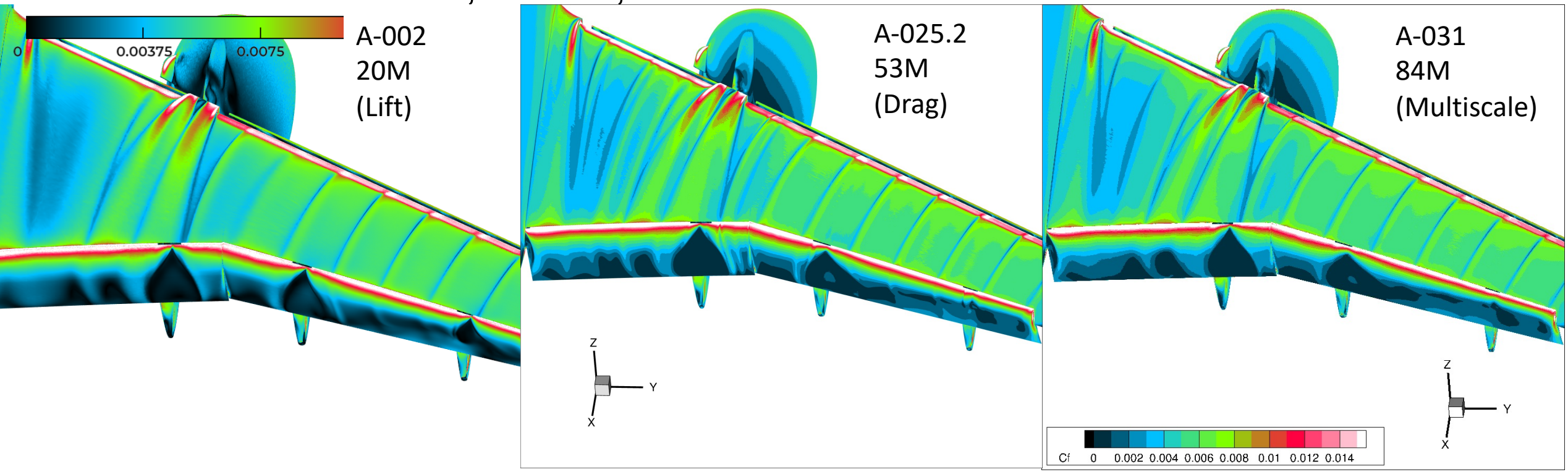

Supporting Evidence

KQ 1	Can adaptive mesh convergence be achieved on the full HLCRM model across the angle of attack range?

- Complexity continuation at 7.05° case1b (SA)
  - Includes Fixed RANS FG best practice (SA)

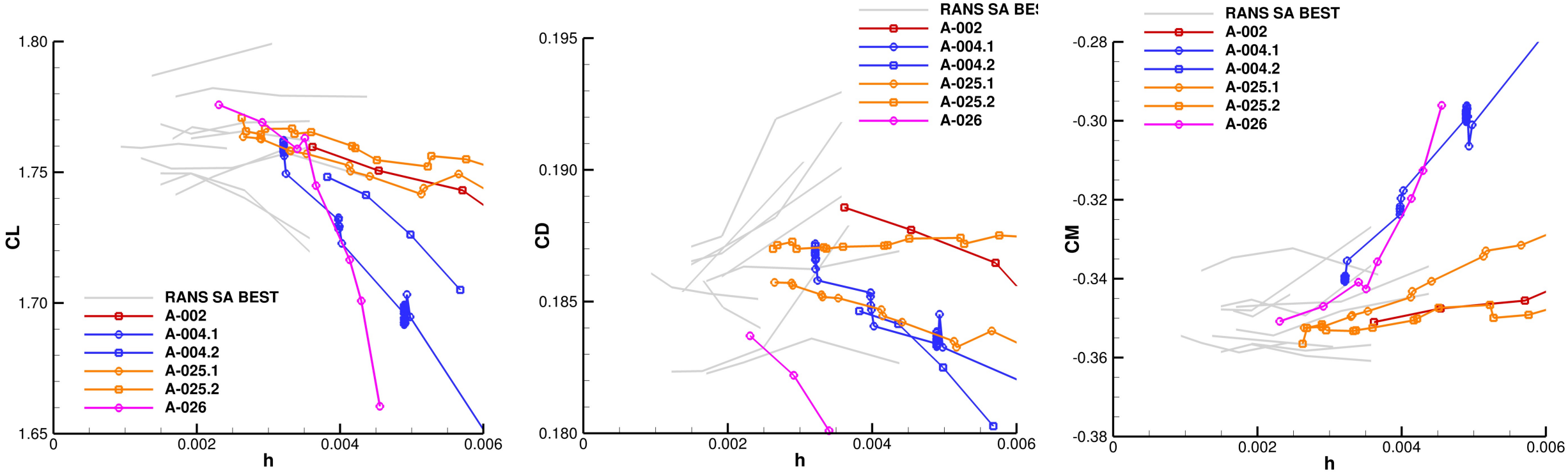

$h = N^{-1/3}$

Supporting Evidence

KQ 1	Can adaptive mesh convergence be achieved on the full HLCRM model across the angle of attack range?

- Complexity continuation at 7.05° case1b (SA)
  - Best practice

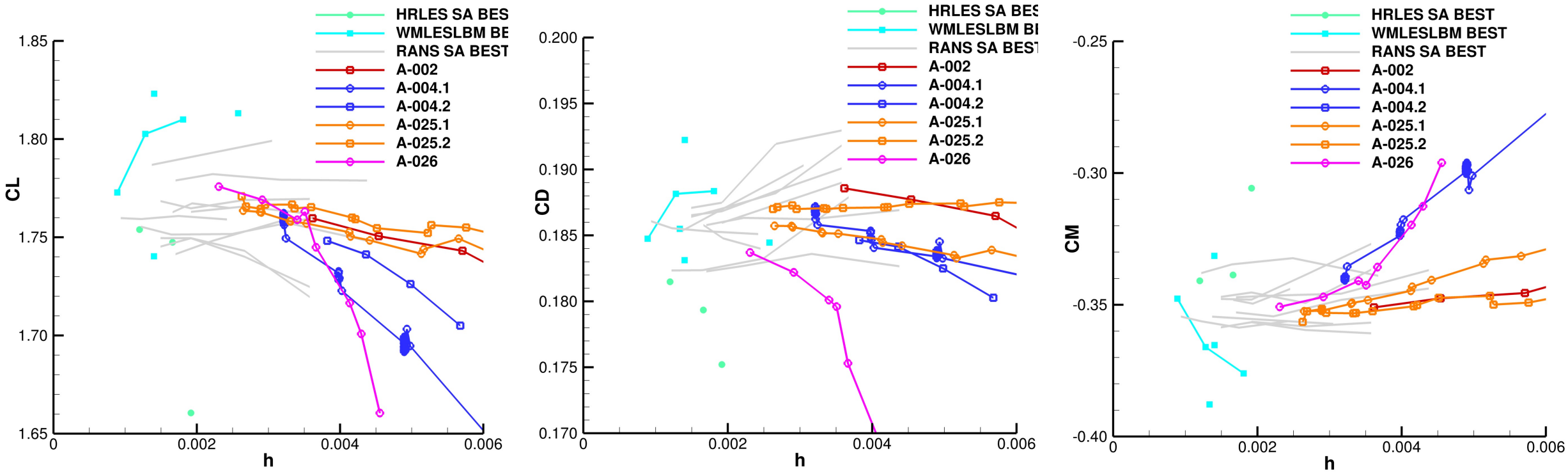

$h = N^{-1/3}$

Supporting Evidence

KQ 1	Can adaptive mesh convergence be achieved on the full HLCRM model across the angle of attack range?

- Angle of attack continuation case2a (SA)
- Mesh refinement of AoA sweeps (partial iterative convergence)

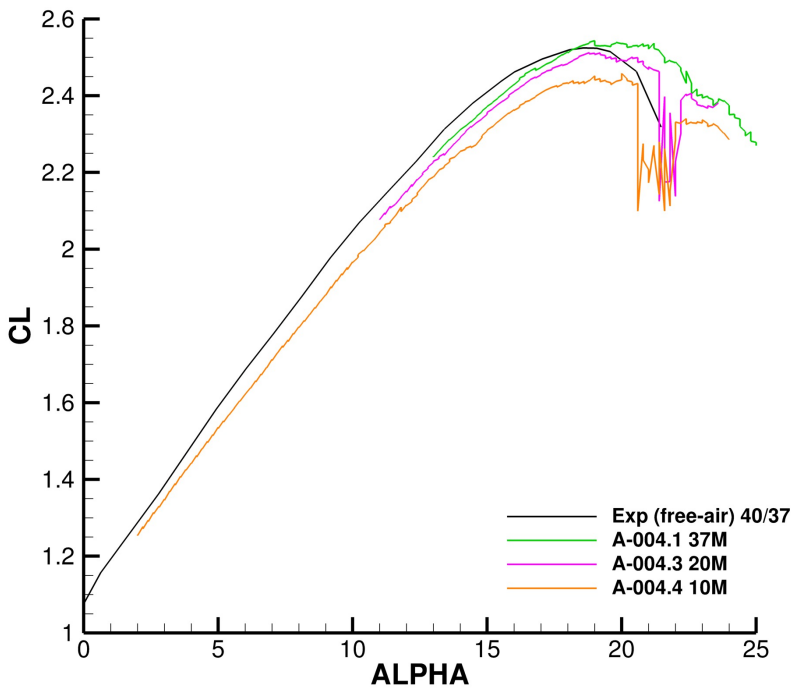

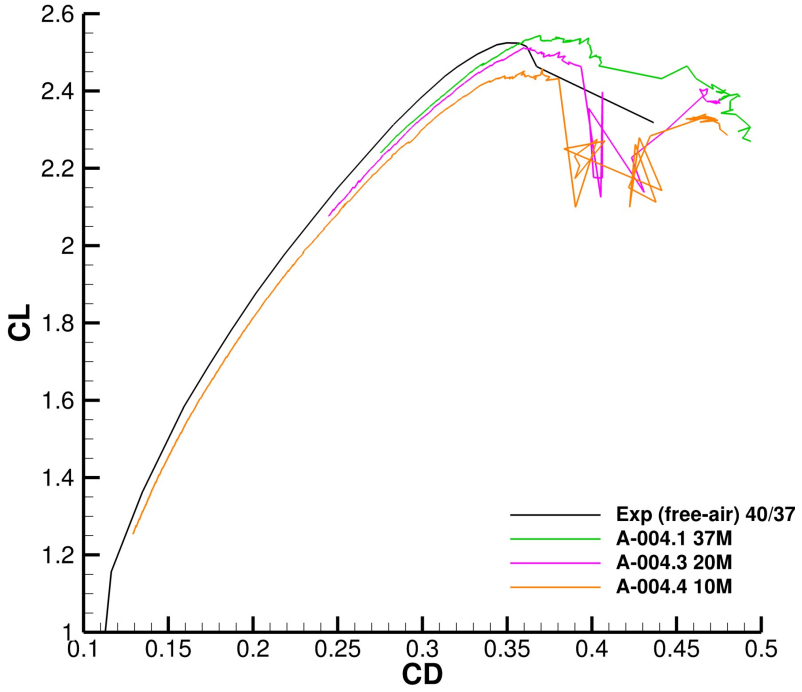

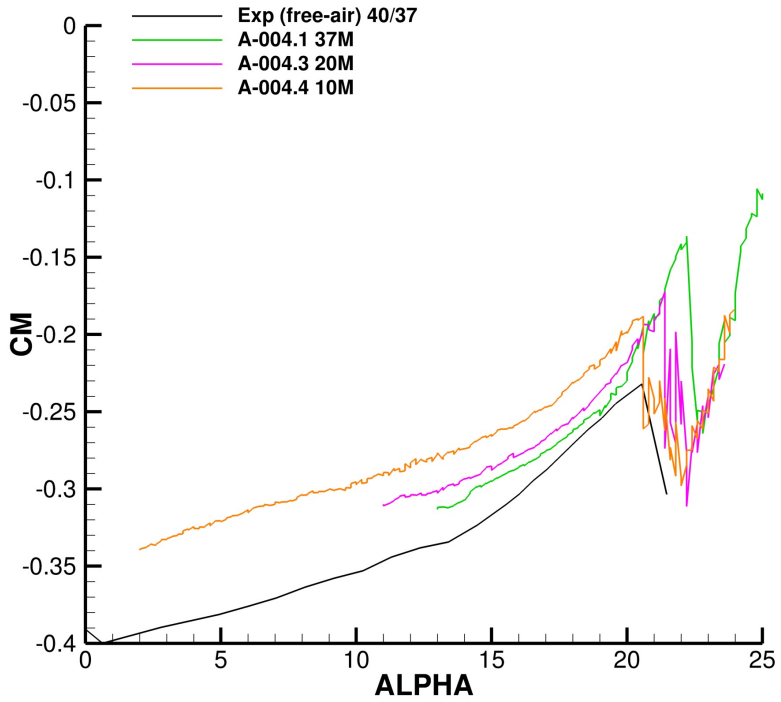

Key Findings / Lessons Learned

KQ 2	What are the best practices/lessons learned and outstanding technical issues for adaptive mesh modeling of high-lift?

Key Findings / Lessons Learned

- Adaptive meshing required tighter boundary representation tolerances than provided, surrogates used by most participants
- Solution interpolation helpful during complexity and angle of attack continuation (solvers with approximate linearization)
- Multiscale metric is slower to propagate features (e.g., slat wakes) than goal-based methods
- Counterexample to “classic mesh quality” metrics

Supporting Evidence

KQ 2	What are the best practices/lessons learned and outstanding technical issues for adaptive mesh modeling of high-lift?

- Adaptive meshing required more tighter boundary representation tolerances than provided, this is typical of “complex” models and currently addressed via geometry surrogates
- Meshing guidelines 0.00239 inches for the coarsest mesh and 0.00035 inches for finest. CRM-HL Mean Aerodynamic Chord 275.8 in.

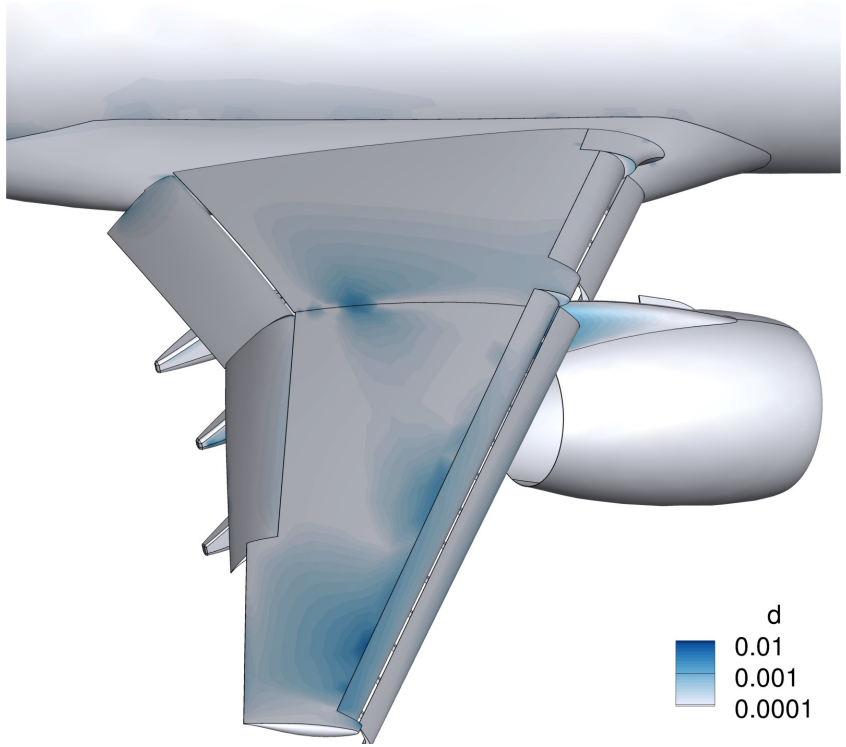

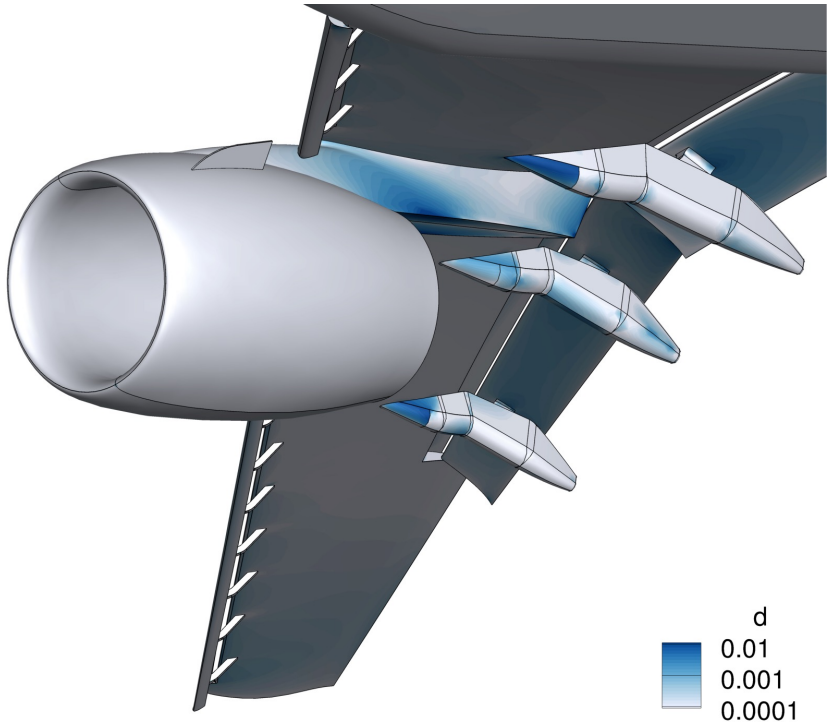

Supporting Evidence

KQ 2	What are the best practices/lessons learned and outstanding technical issues for adaptive mesh modeling of high-lift?

- Multiscale metric is slower (required more adaptations) to propagate features (e.g., slat wakes) than goal-based methods

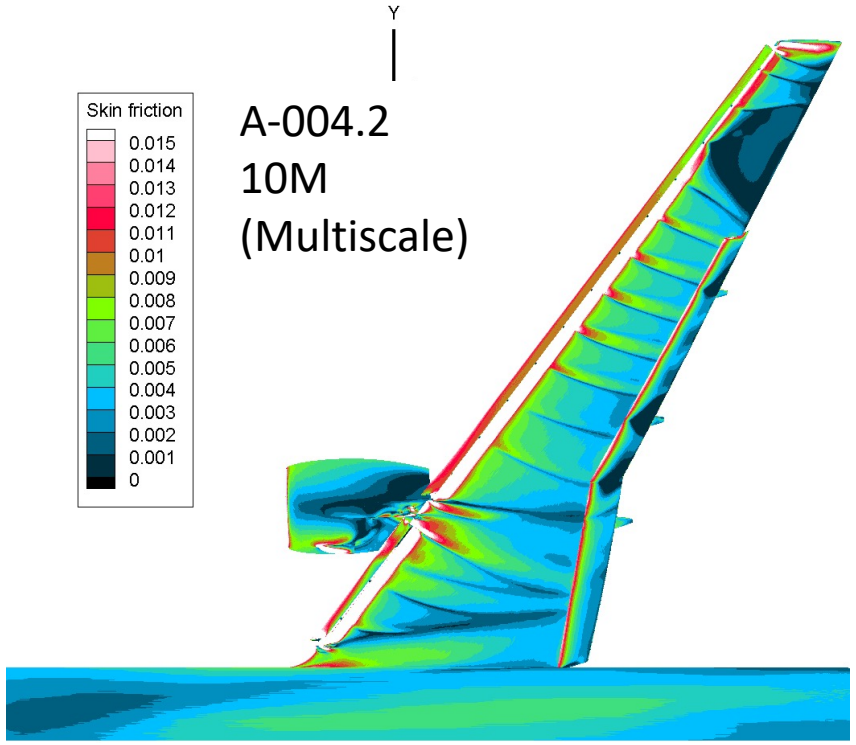

Machine-Level
Convergence
Finite-Element

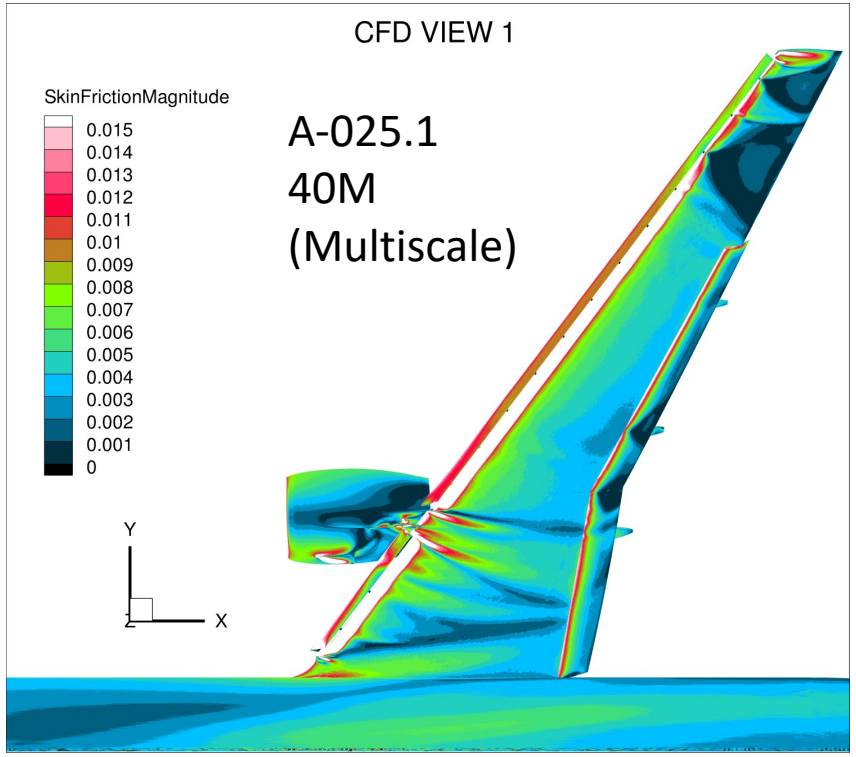

Supporting Evidence

KQ 2	What are the best practices/lessons learned and outstanding technical issues for adaptive mesh modeling of high-lift?

- Multiscale metric is slower (required more adaptations) to propagate features (e.g., slat wakes) than goal-based methods

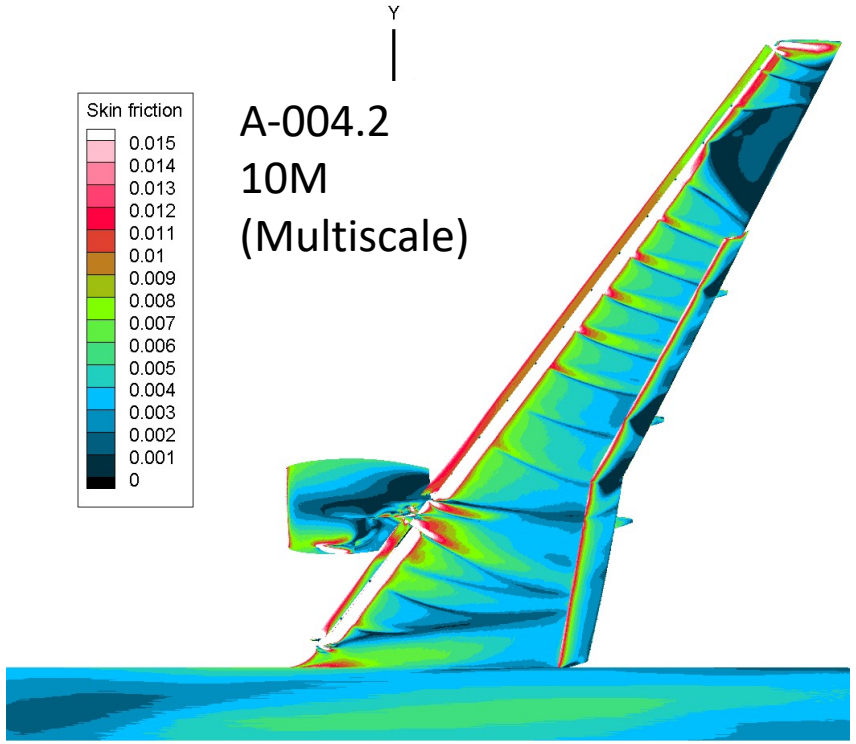

Machine-Level
Convergence
Finite-Element

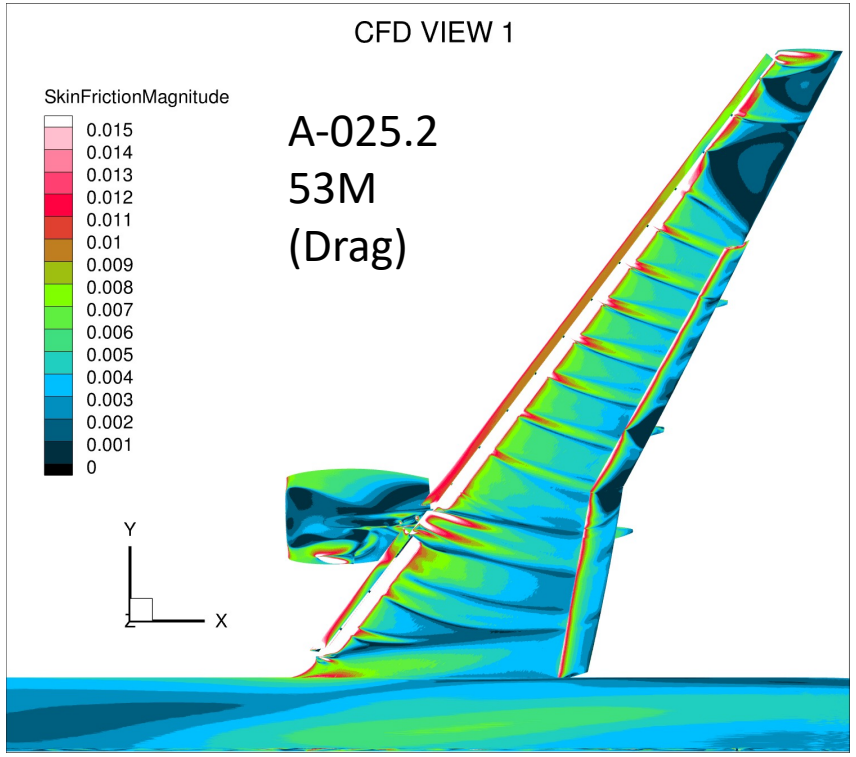

Supporting Evidence

KQ 2	What are the best practices/lessons learned and outstanding technical issues for adaptive mesh modeling of high-lift?

- Solution interpolation helpful during complexity and angle of attack continuation (solver uses approximate linearization)

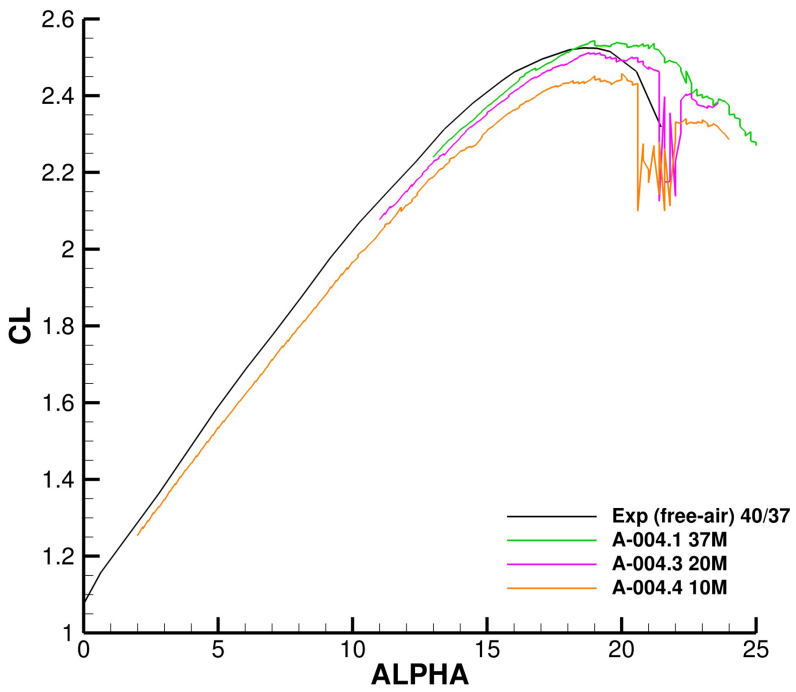

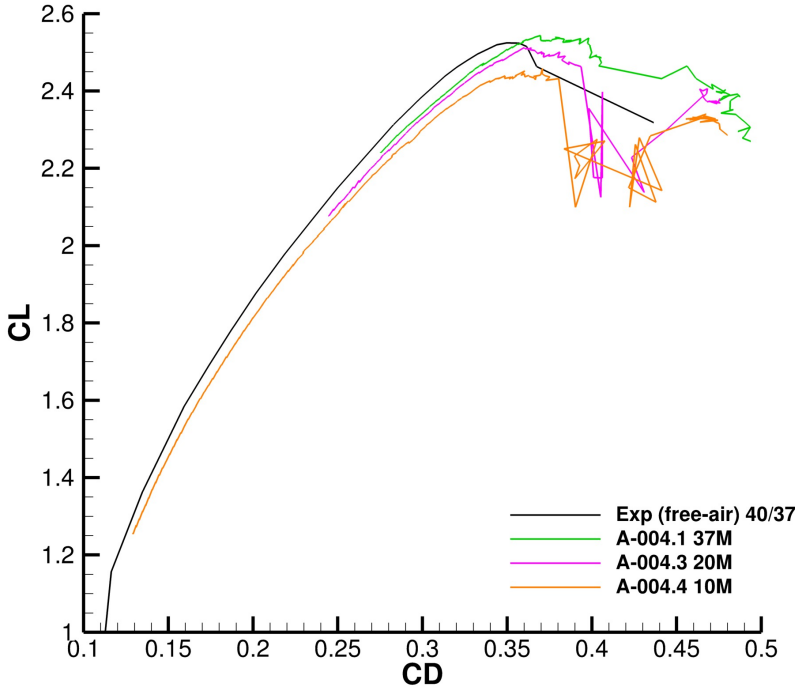

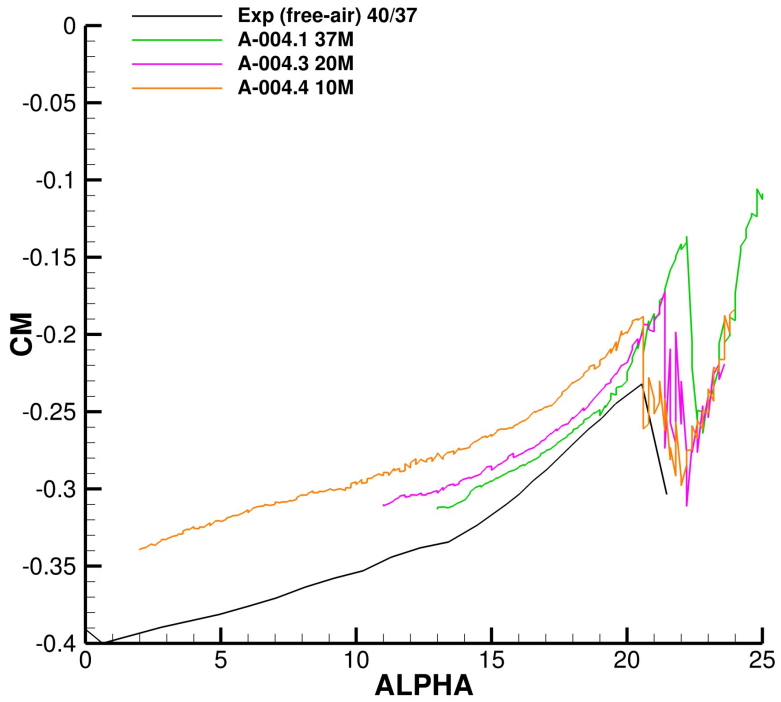

Supporting Evidence

KQ 2	What are the best practices/lessons learned and outstanding technical issues for adaptive mesh modeling of high-lift?

- Counterexample to “classic mesh quality” metrics
- Anisotropic metric conformant
- Dihedral angles can exceed 179.999°
  - Mitigated by alignment with gradient and interpolated initial condition
- Tetrahedra volumes span 1e-8 $inch^3$ to 1e14 $inch^3$
  - $275{,}800^3$ domain is 2e16 $inch^3$

Key Findings / Lessons Learned

KQ 3	Can the causes of multiple solutions and techniques to encourage the “desired” branch be identified?

Key Findings / Lessons Learned

- Regions of suspected multiple solutions have become more consistent with mesh refinement and iterative convergence
- Identify the regions of the solution where multiple solutions are observed (separation)

Supporting Evidence

KQ 3	Can the causes of multiple solutions and techniques to encourage the “desired” branch be identified?

- Suspected areas of suspected multiple solutions are categorized as *Plausible, Confirmed, or Busted*

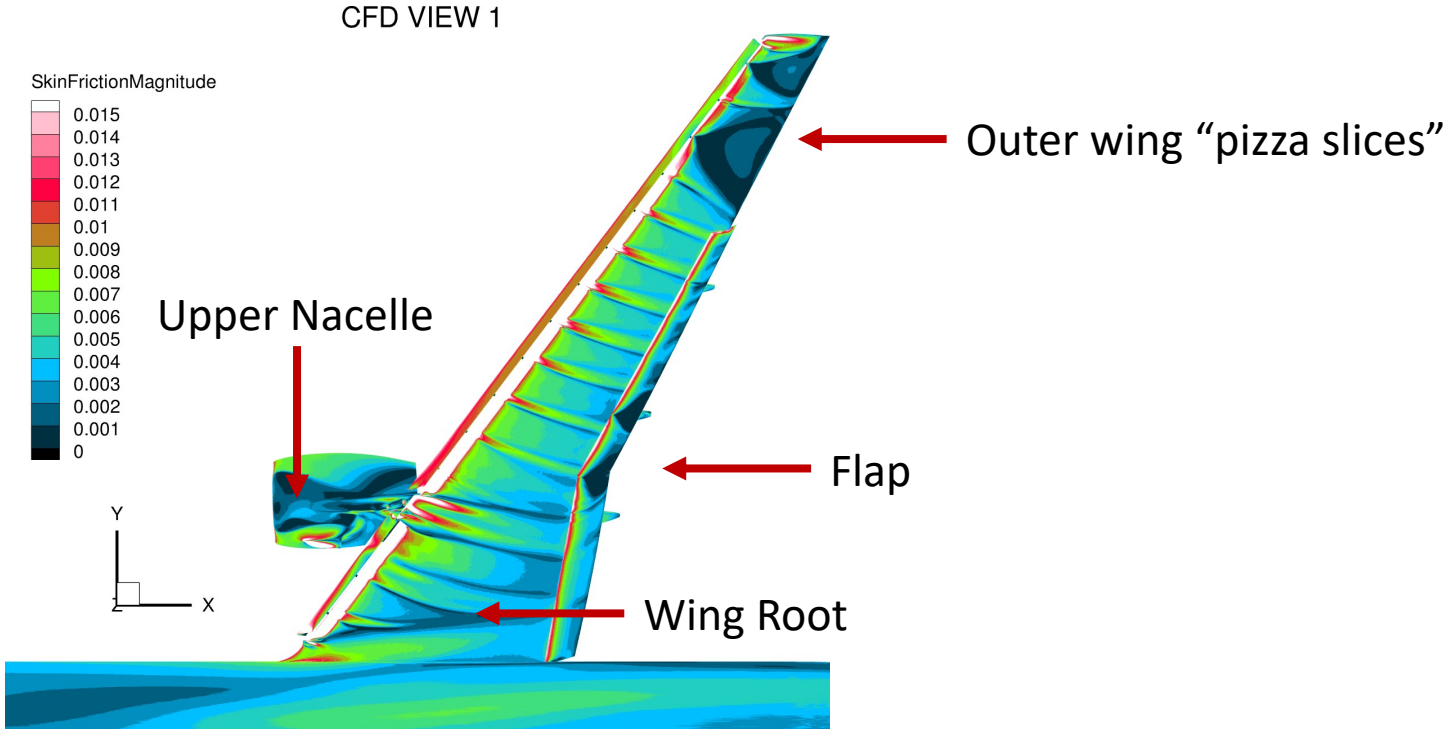

Supporting Evidence

KQ 3	Can the causes of multiple solutions and techniques to encourage the “desired” branch be identified?

- Low AoA: flap separation 7.05° ☞ *Suspected?*

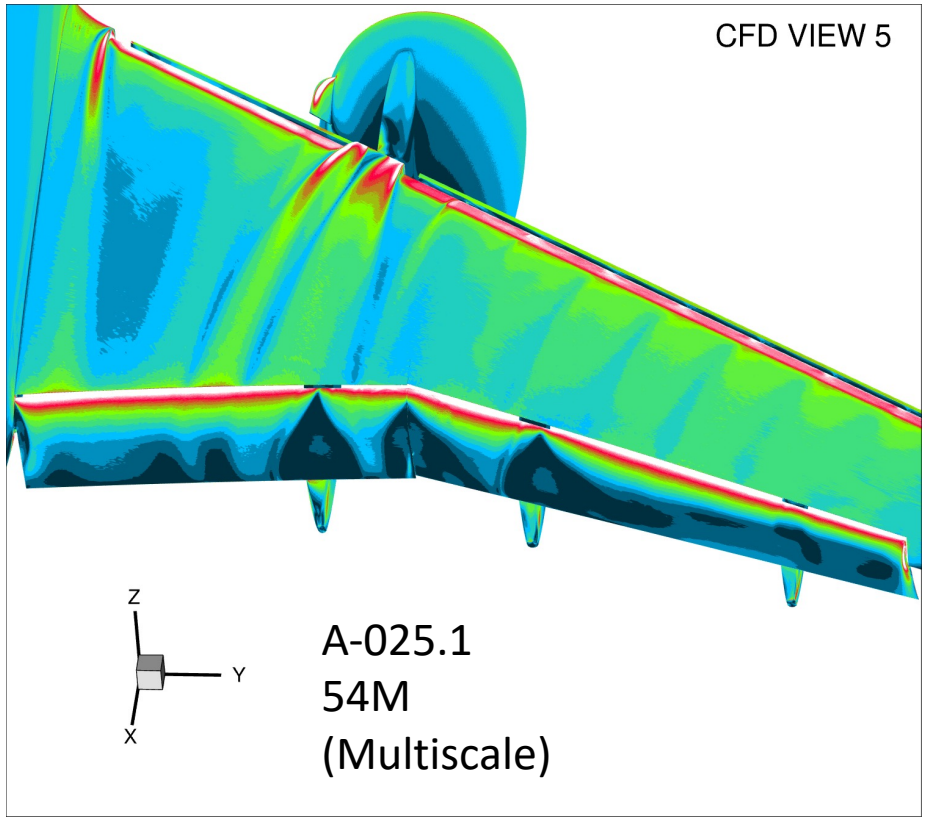

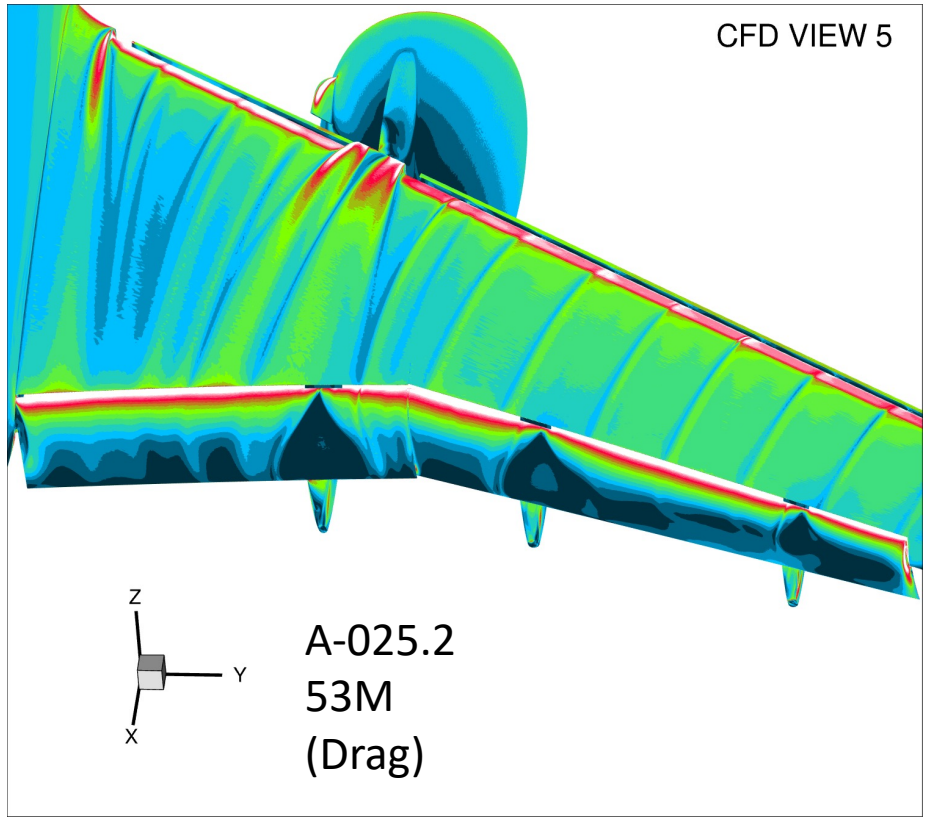

Supporting Evidence

KQ 3	Can the causes of multiple solutions and techniques to encourage the “desired” branch be identified?

- Low AoA: flap separation 7.05° ☞ *Busted?*
  - 3 different solvers, metrics, remeshers

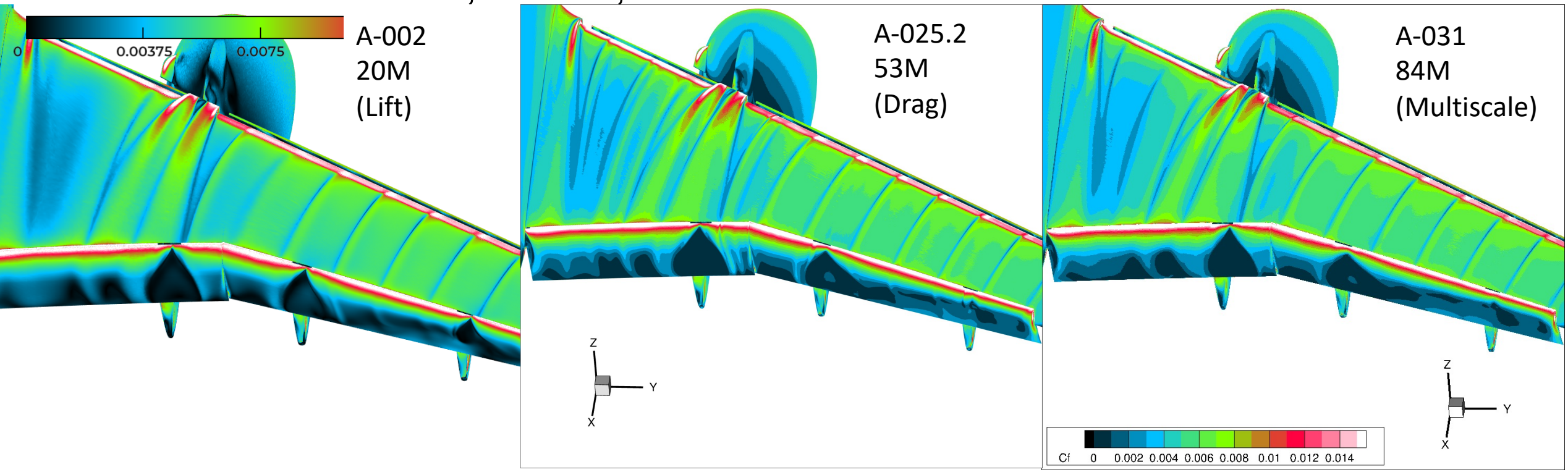

Supporting Evidence

KQ 3	Can the causes of multiple solutions and techniques to encourage the “desired” branch be identified?

- Mid AoA: outboard wing “pizza slices” in slat wakes 19.57°
- Present with machine-level convergence, details vary ☞ *Confirmed?*

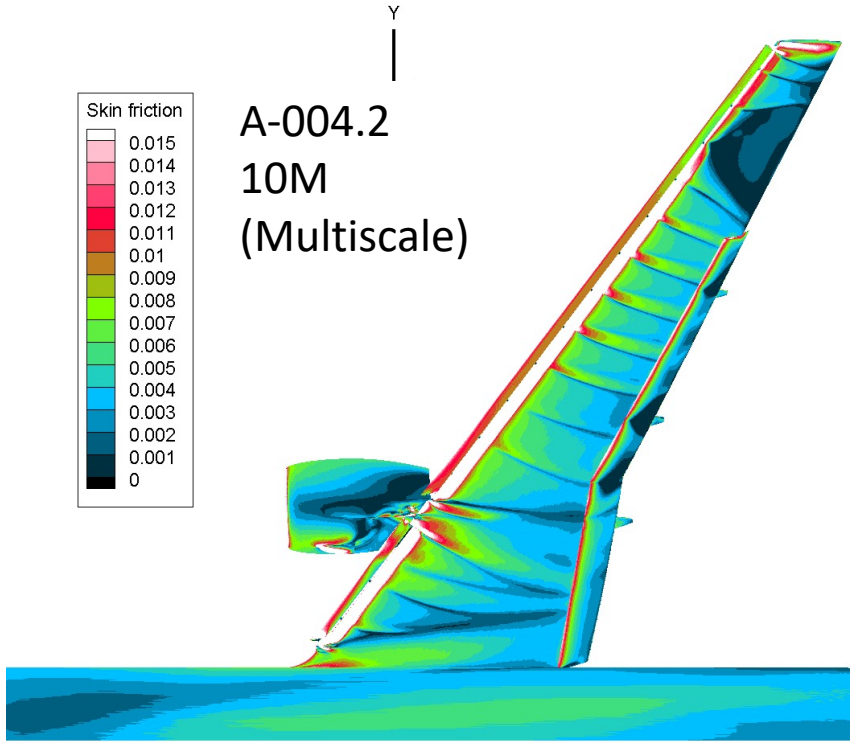

Machine-Level
Convergence
Finite-Element

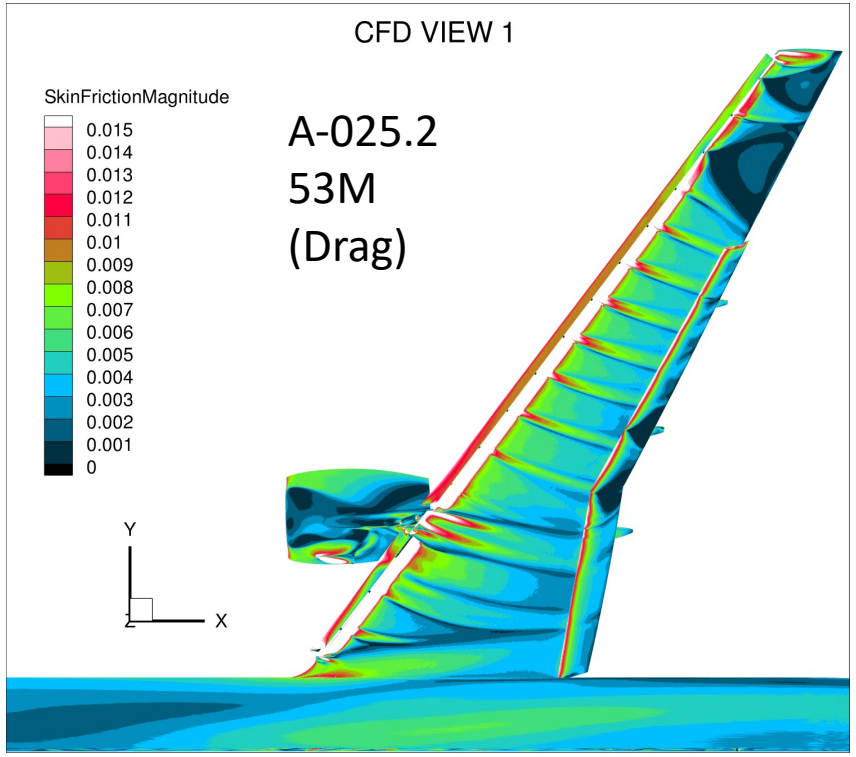

Supporting Evidence

KQ 3	Can the causes of multiple solutions and techniques to encourage the “desired” branch be identified?

- Prestall: separation on the top of the forward nacelle 19.57°
- Separation present in most submissions ☞ *Plausible?*

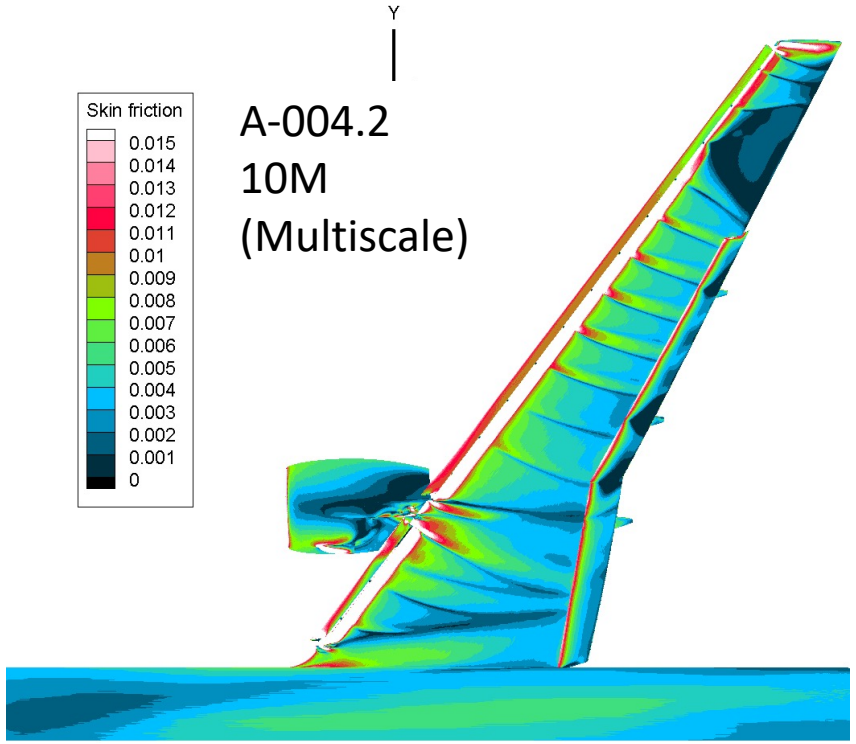

Machine-Level
Convergence
Finite-Element

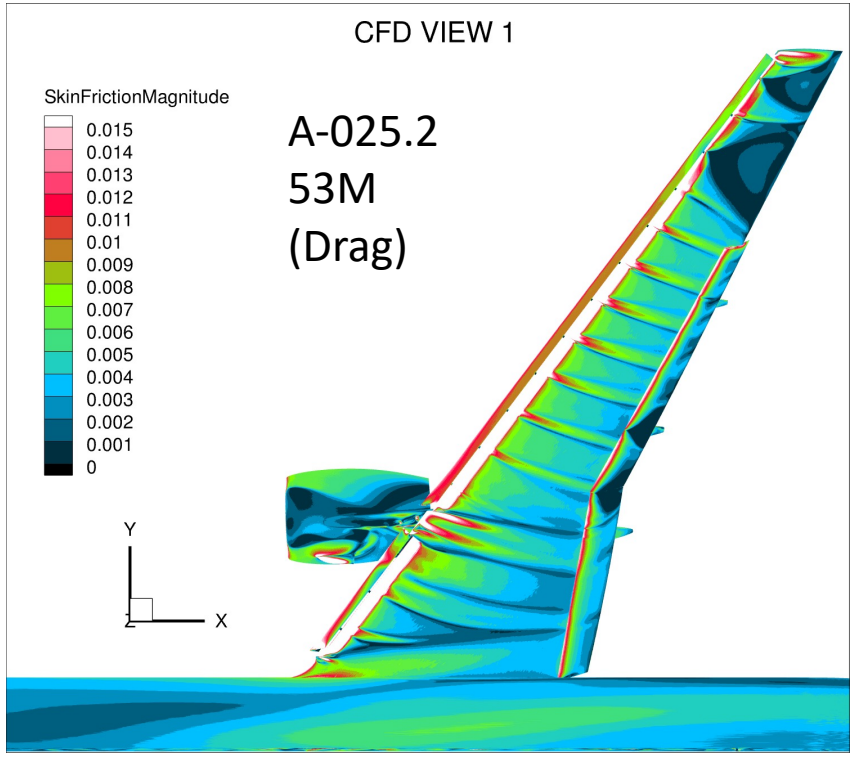

Supporting Evidence

KQ 3	Can the causes of multiple solutions and techniques to encourage the “desired” branch be identified?

- Poststall: wing root or nacelle wake separation 21.47°
- Observation in partially converged solutions ☞ *Plausible?*

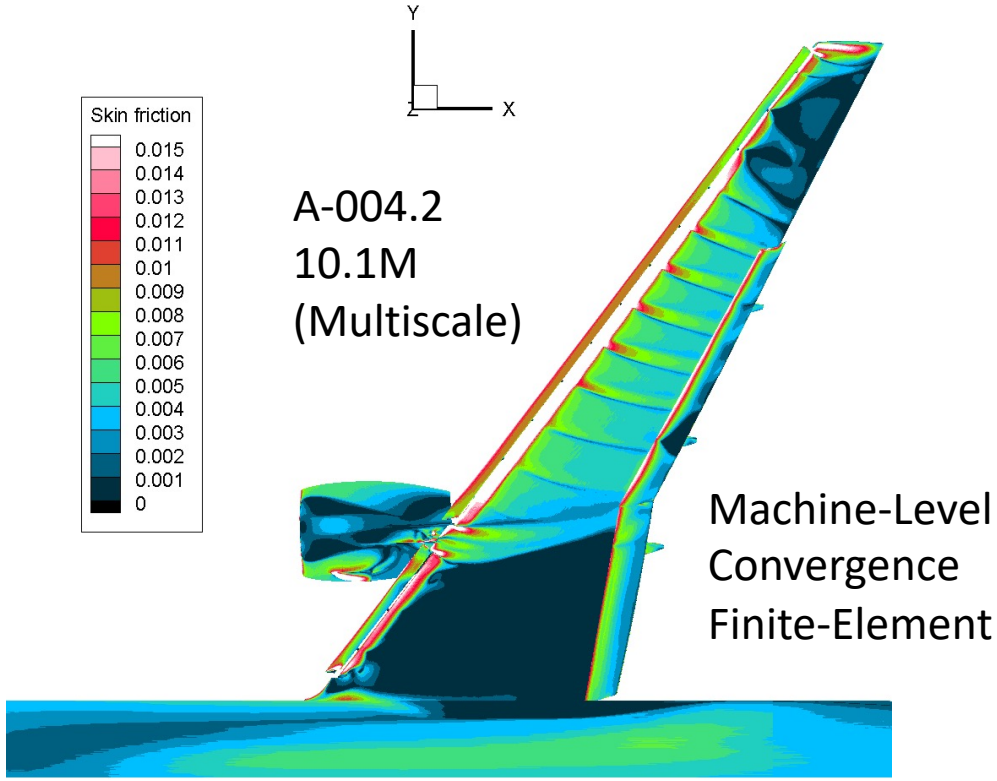

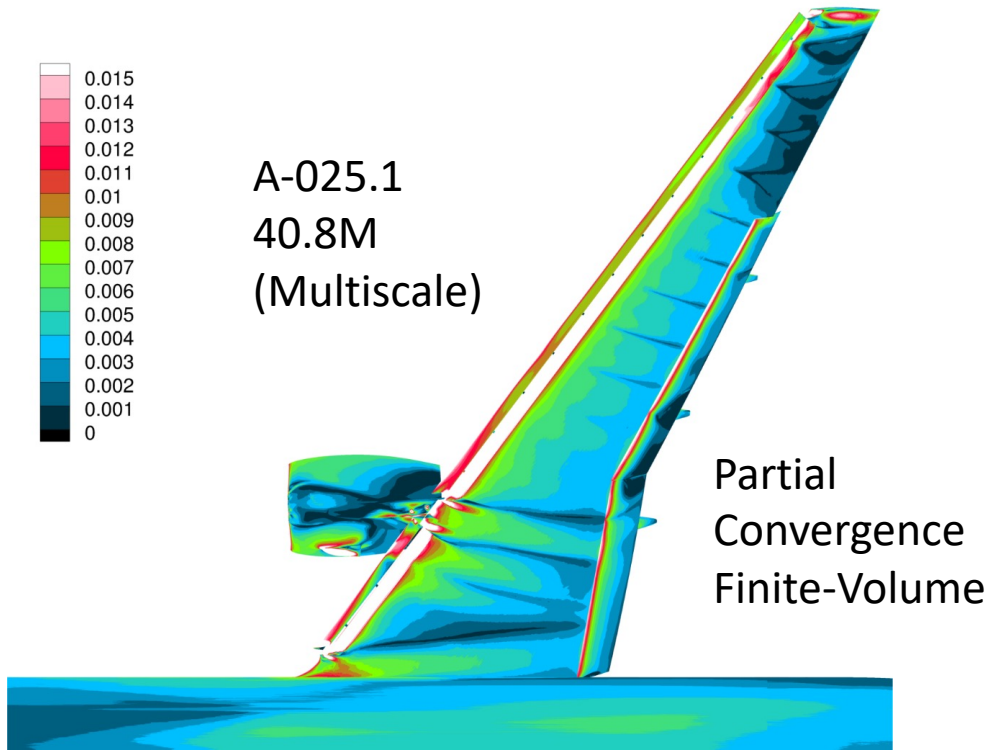

Key Findings / Lessons Learned

KQ 4	Where can mesh adapted RANS contribute to prediction of high-lift flow physics?

Key Findings / Lessons Learned

- Best practice angle of attack sweeps
- Constant fuselage station slices of vorticity contours and mesh

Supporting Evidence

KQ 4	Where can mesh adapted RANS contribute to prediction of high-lift flow physics?

- Angle of attack sweep case2a
- Adapt FG best practice (SA)

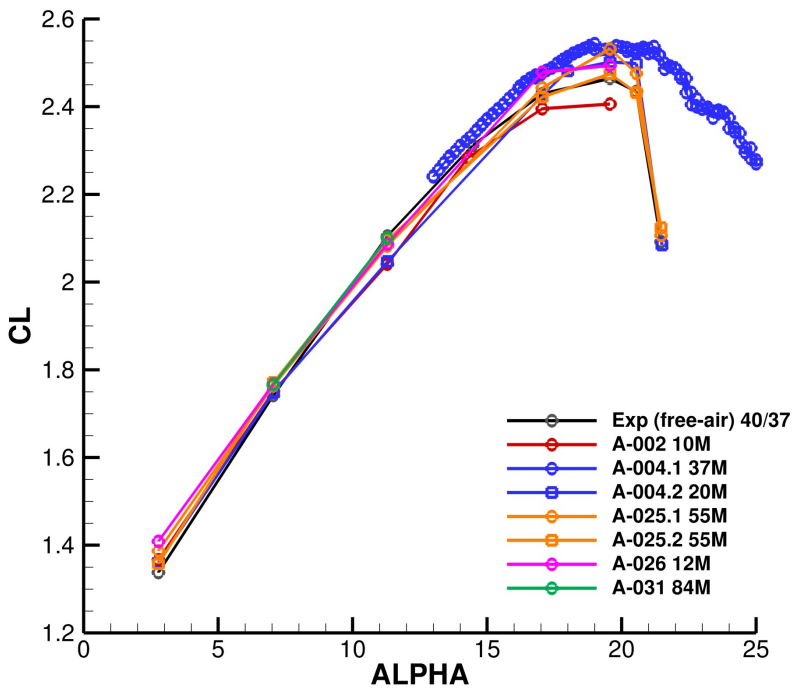

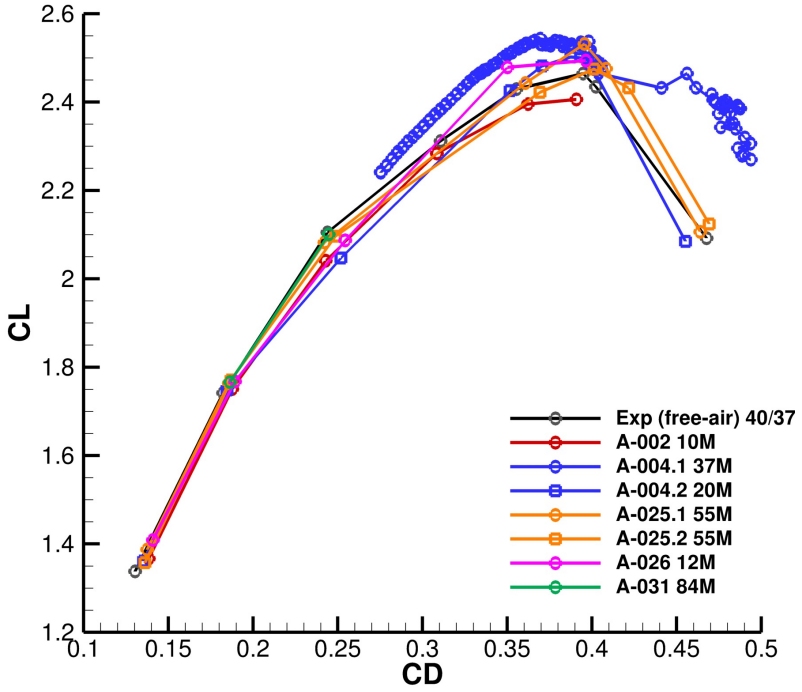

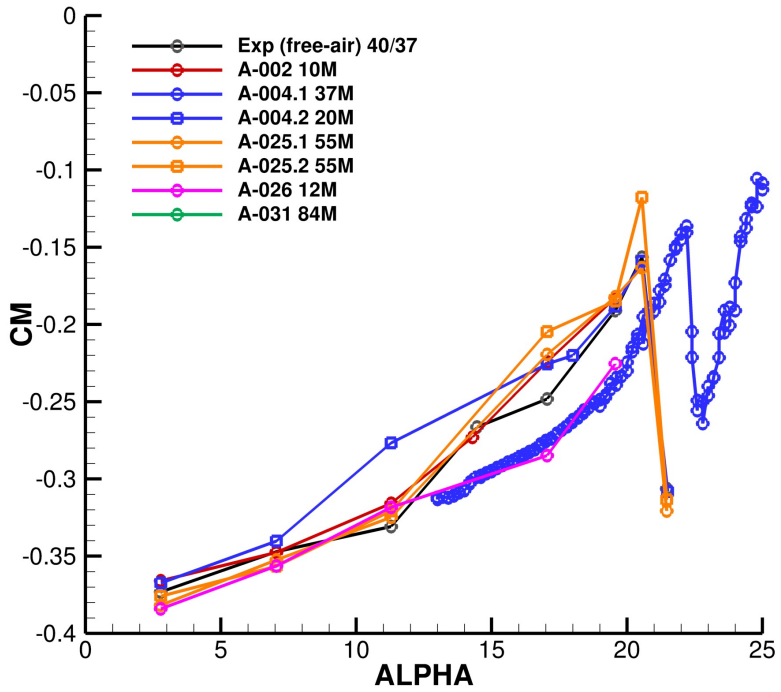

Supporting Evidence

KQ 4	Where can mesh adapted RANS contribute to prediction of high-lift flow physics?

- Angle of attack sweep case2a
- Adapt and Fixed-Mesh RANS FG best practice (SA)

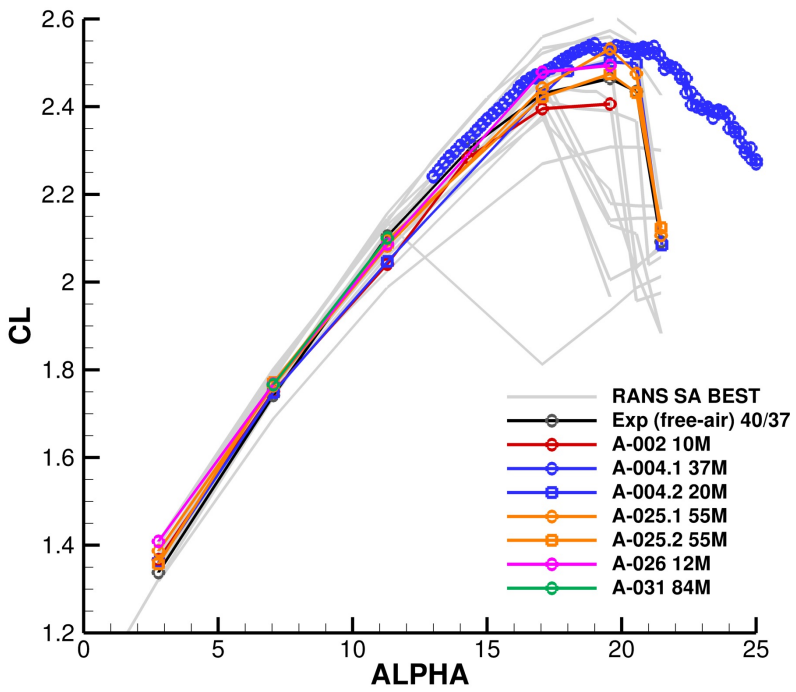

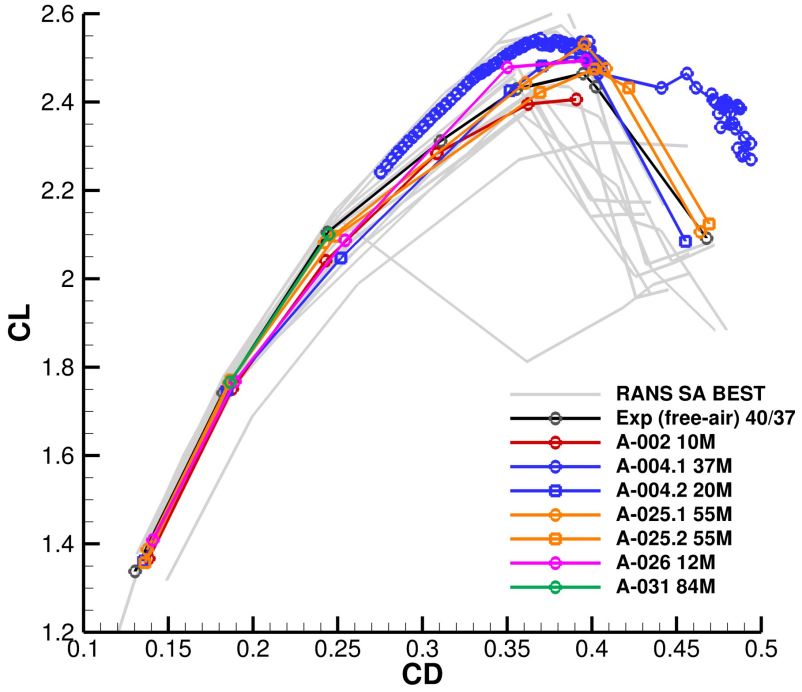

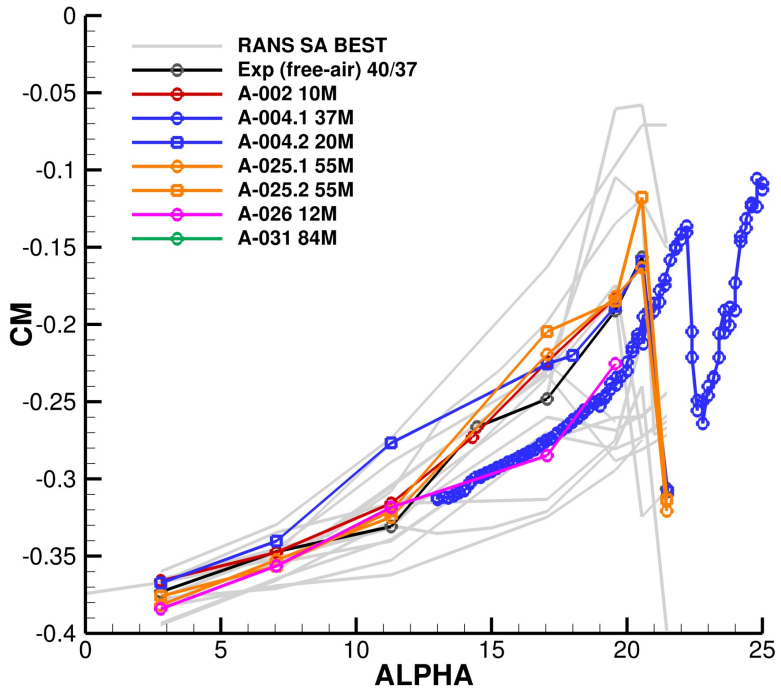

Supporting Evidence

KQ 4	Where can mesh adapted RANS contribute to prediction of high-lift flow physics?

- Angle of attack sweep case2a
- Constant fuselage station slices of vorticity contours and mesh
- View 13, x=1275, wing root, nacelle wake, and slat
- Three flow solvers, two error estimates, and two mesh mechanics implementations
- Vortices and wakes implicitly tracked, a challenge for expert-crafted meshes
- It is easier to obtain consistent solutions from different organizations than consistent figure styles!

Supporting Evidence

KQ 4	Where can mesh adapted RANS contribute to prediction of high-lift flow physics?

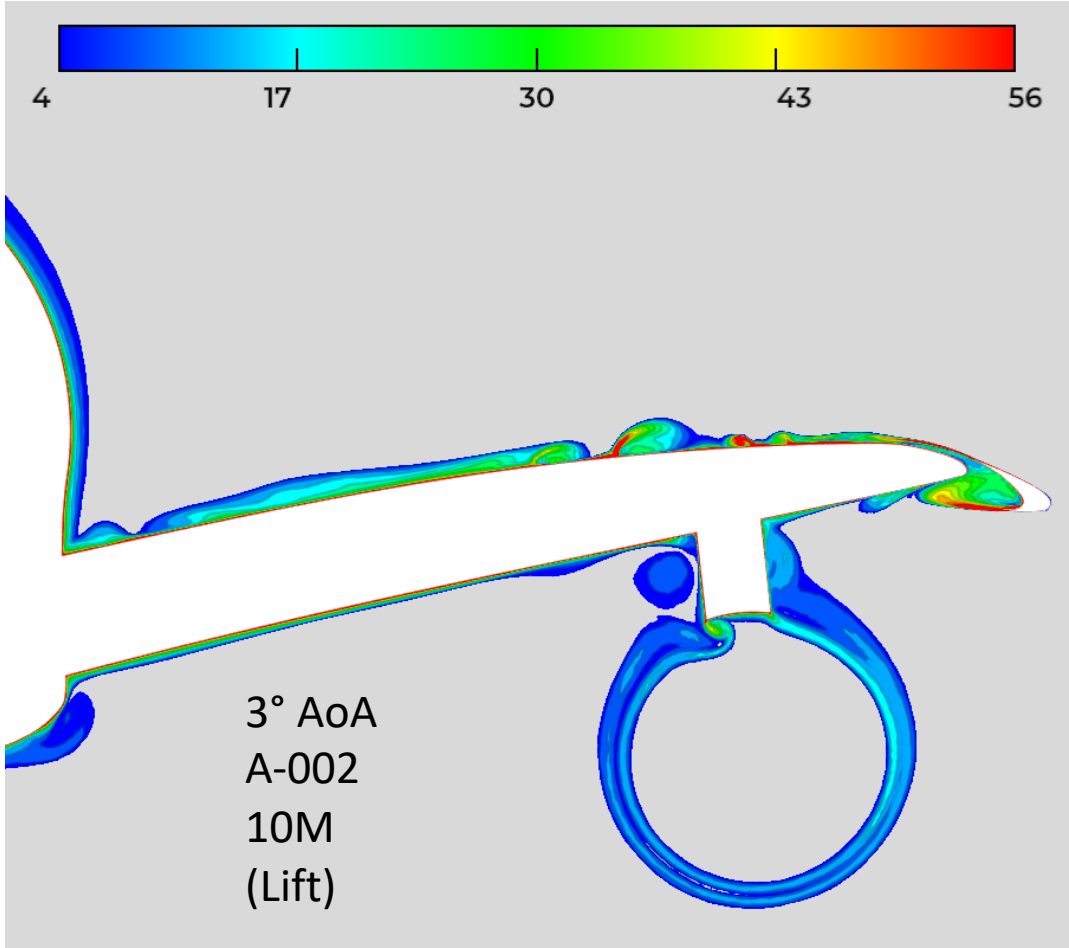

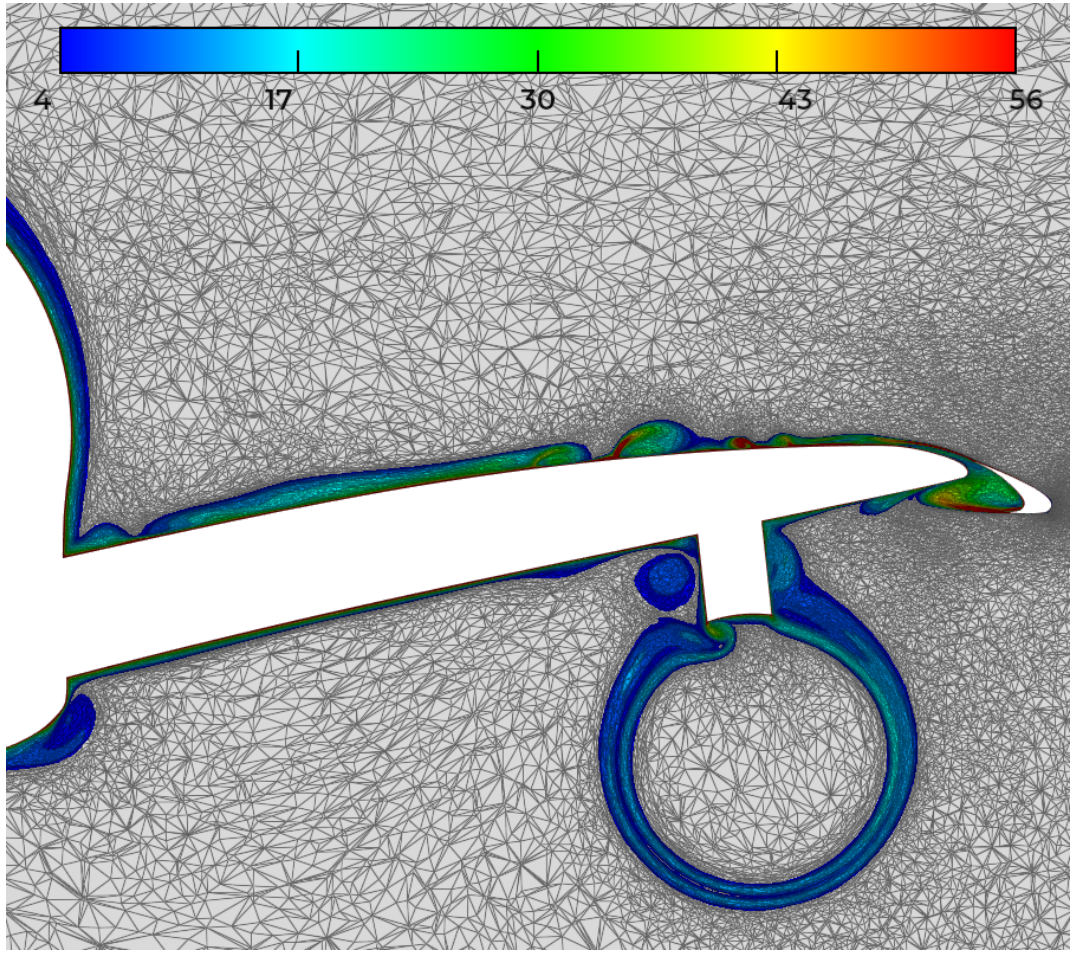

Supporting Evidence

KQ 4	Where can mesh adapted RANS contribute to prediction of high-lift flow physics?

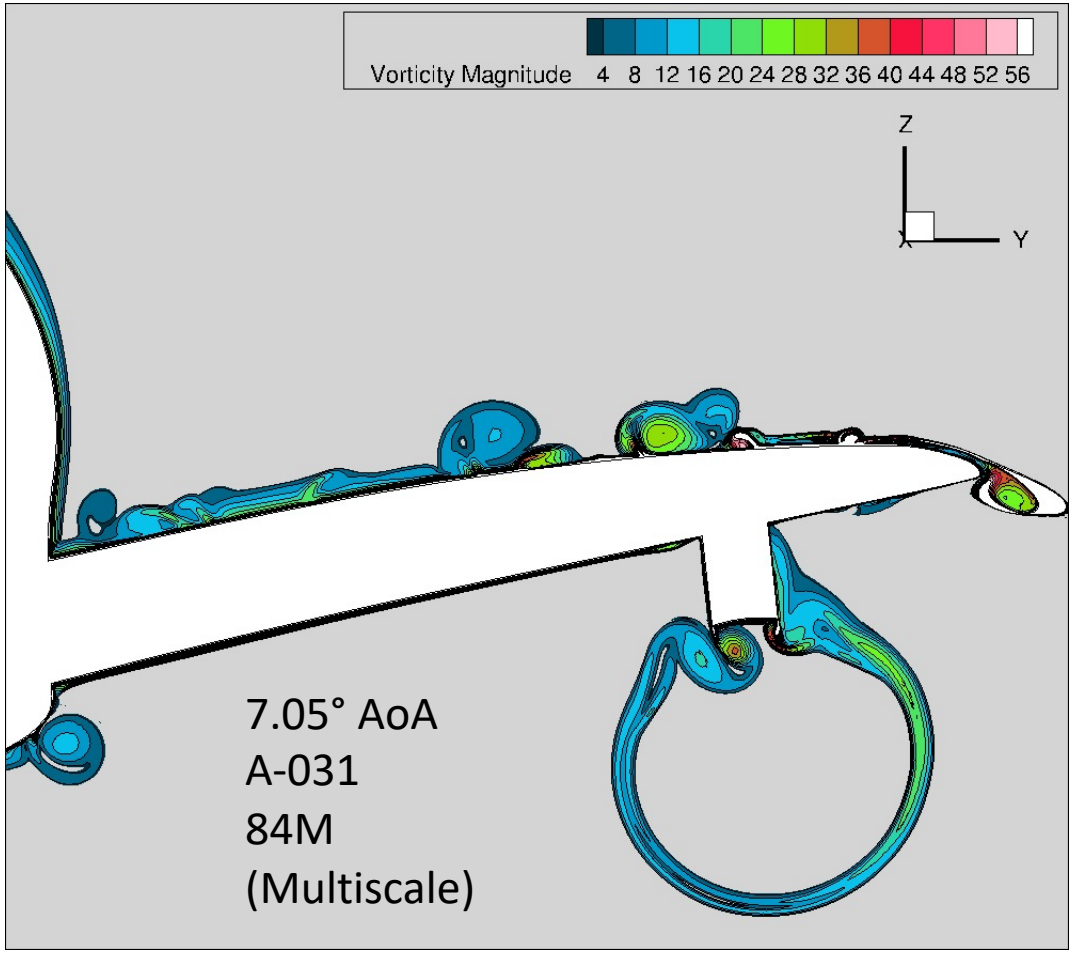

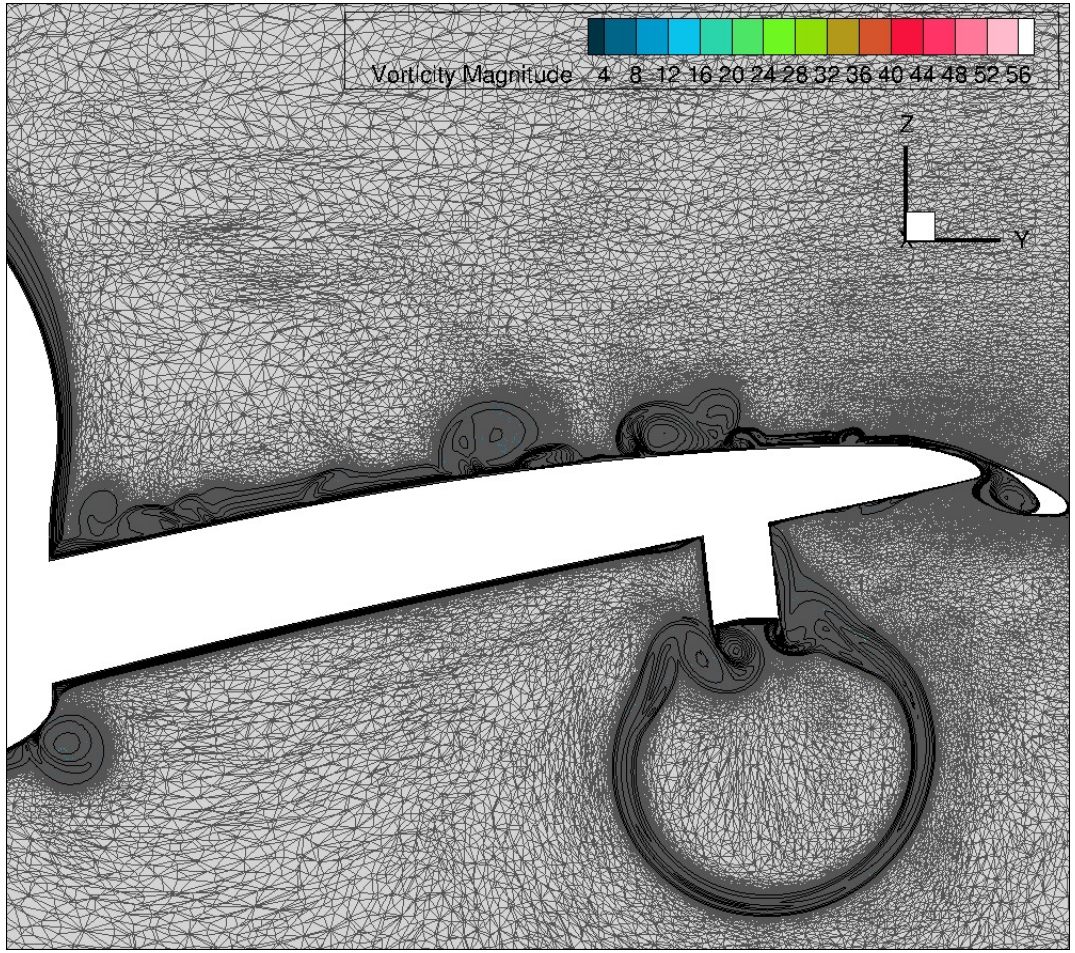

Supporting Evidence

KQ 4	Where can mesh adapted RANS contribute to prediction of high-lift flow physics?

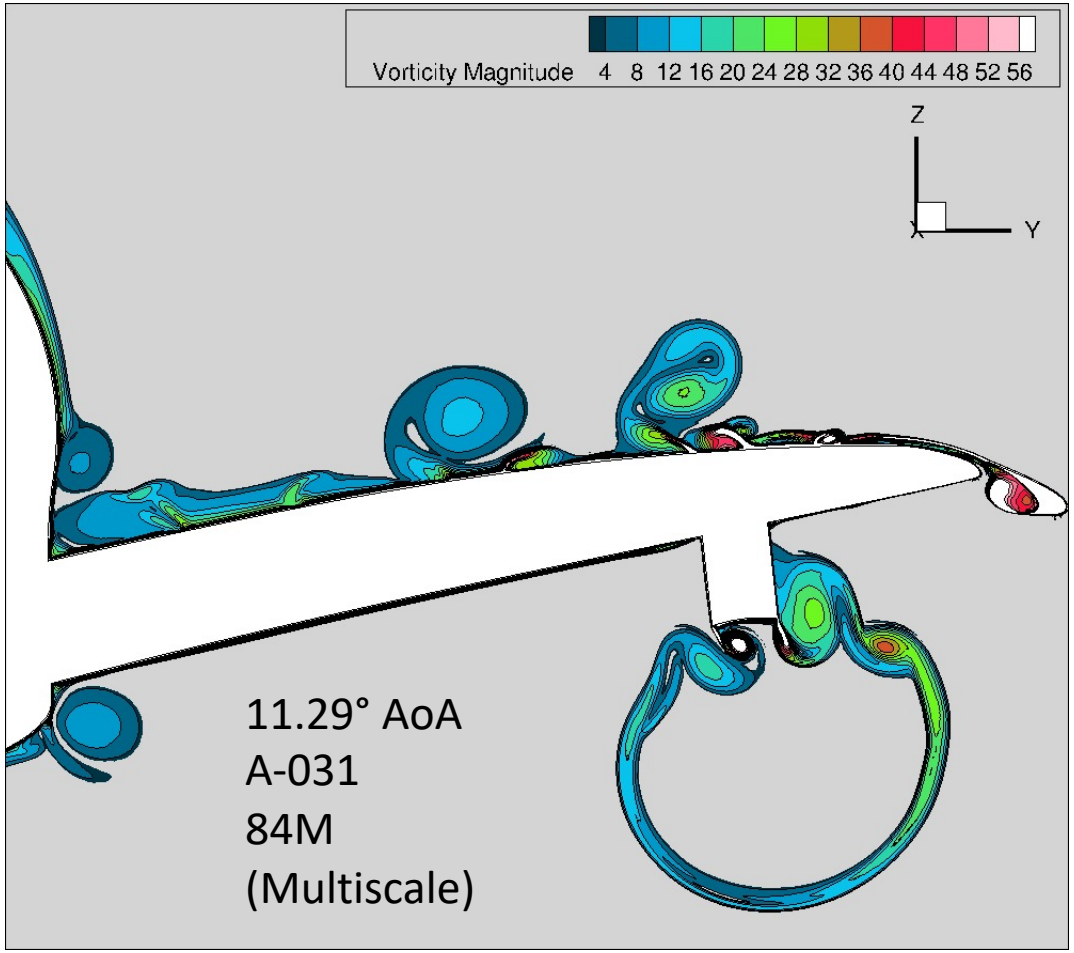

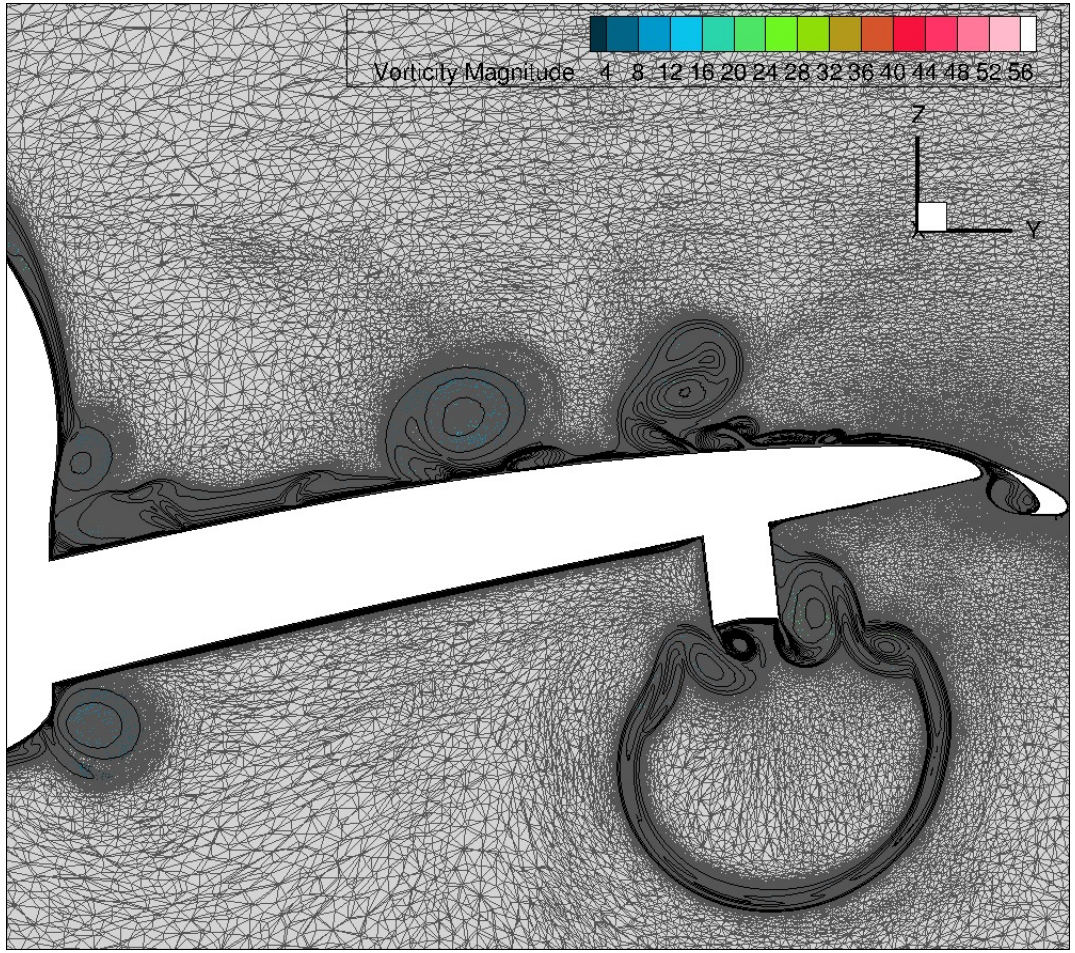

Supporting Evidence

KQ 4	Where can mesh adapted RANS contribute to prediction of high-lift flow physics?

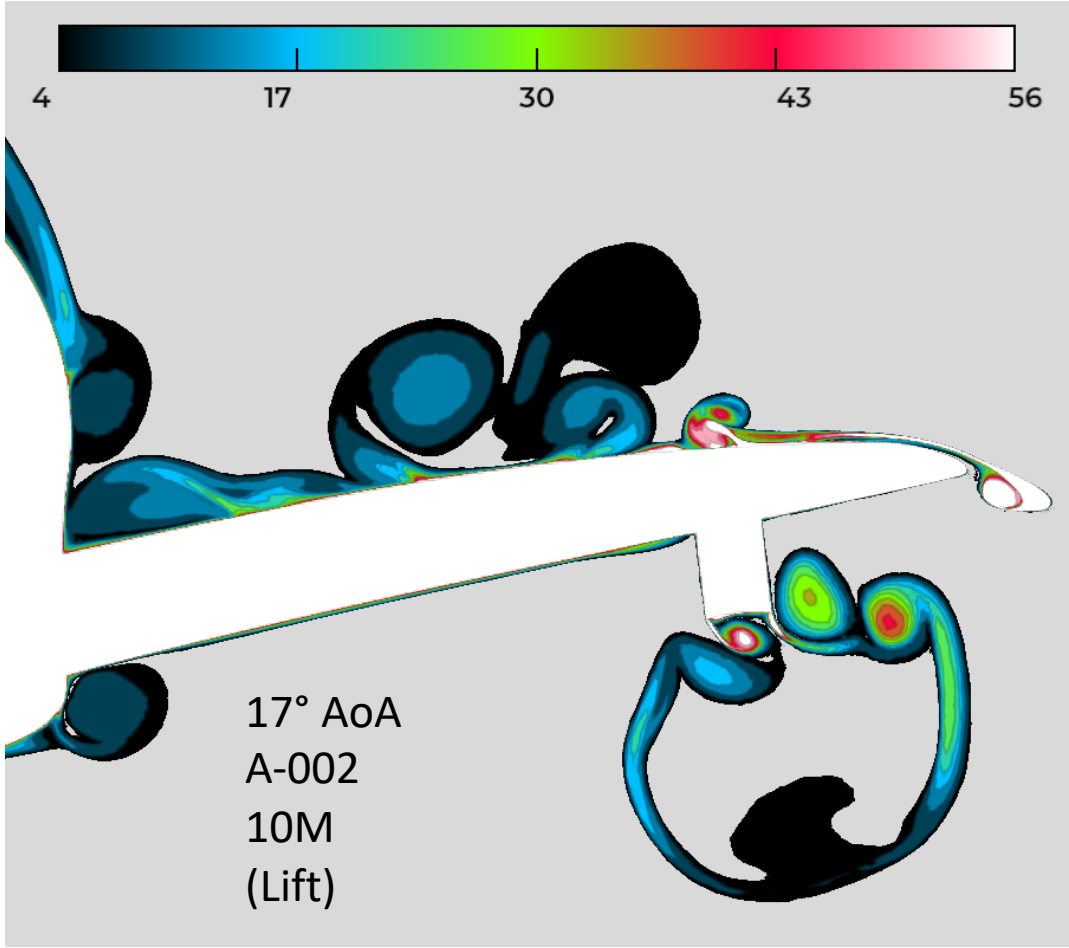

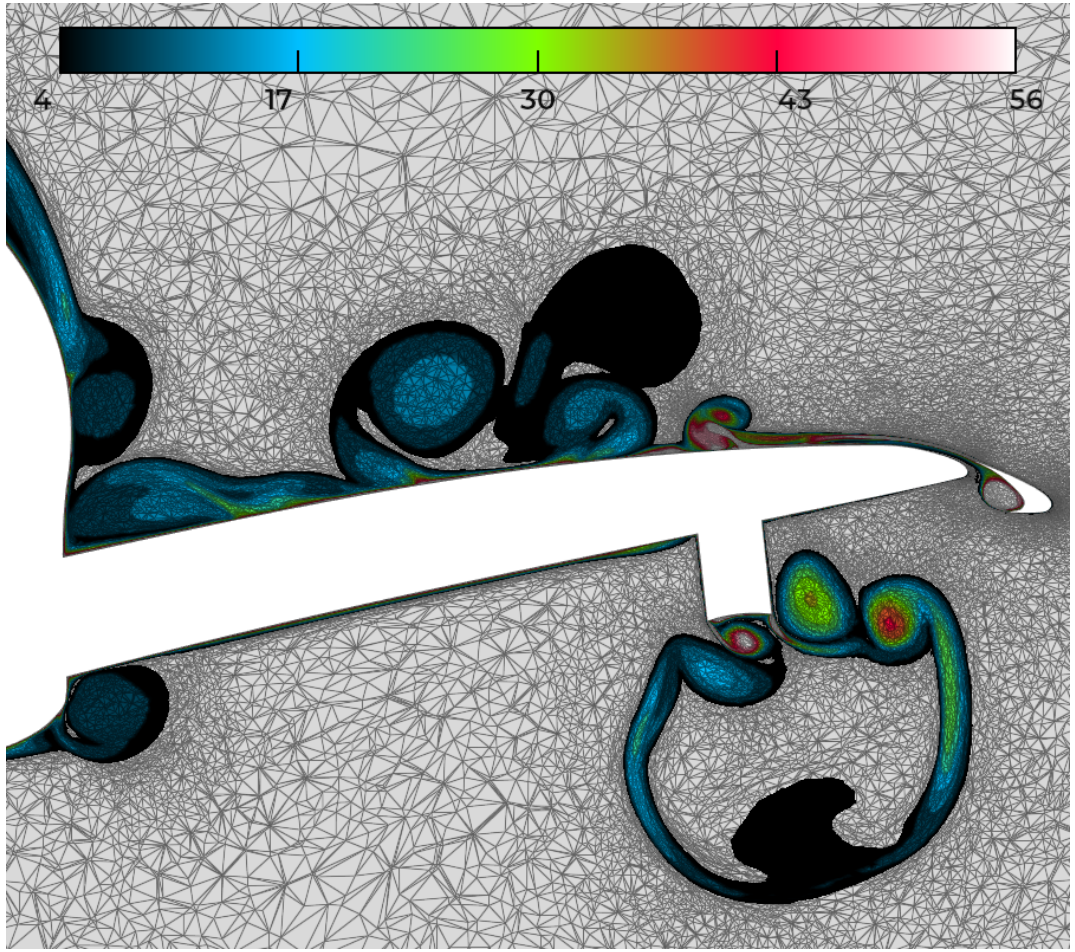

Supporting Evidence

KQ 4	Where can mesh adapted RANS contribute to prediction of high-lift flow physics?

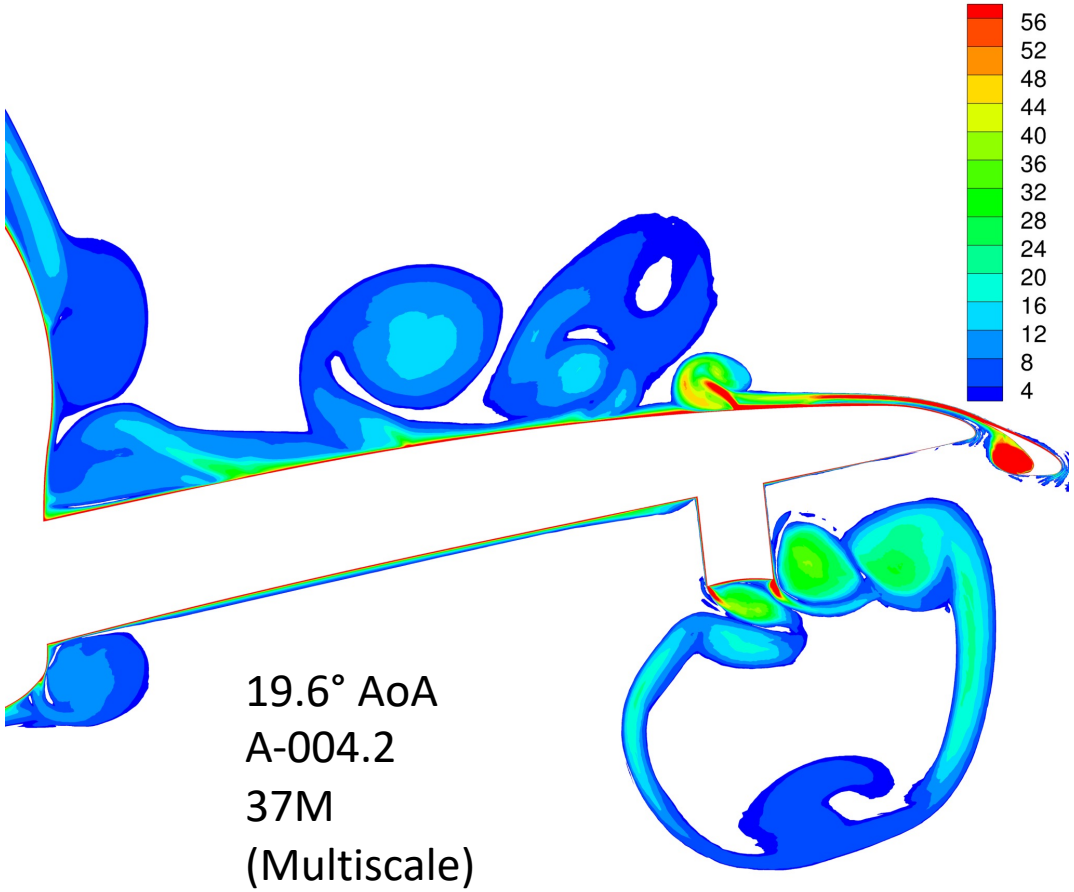

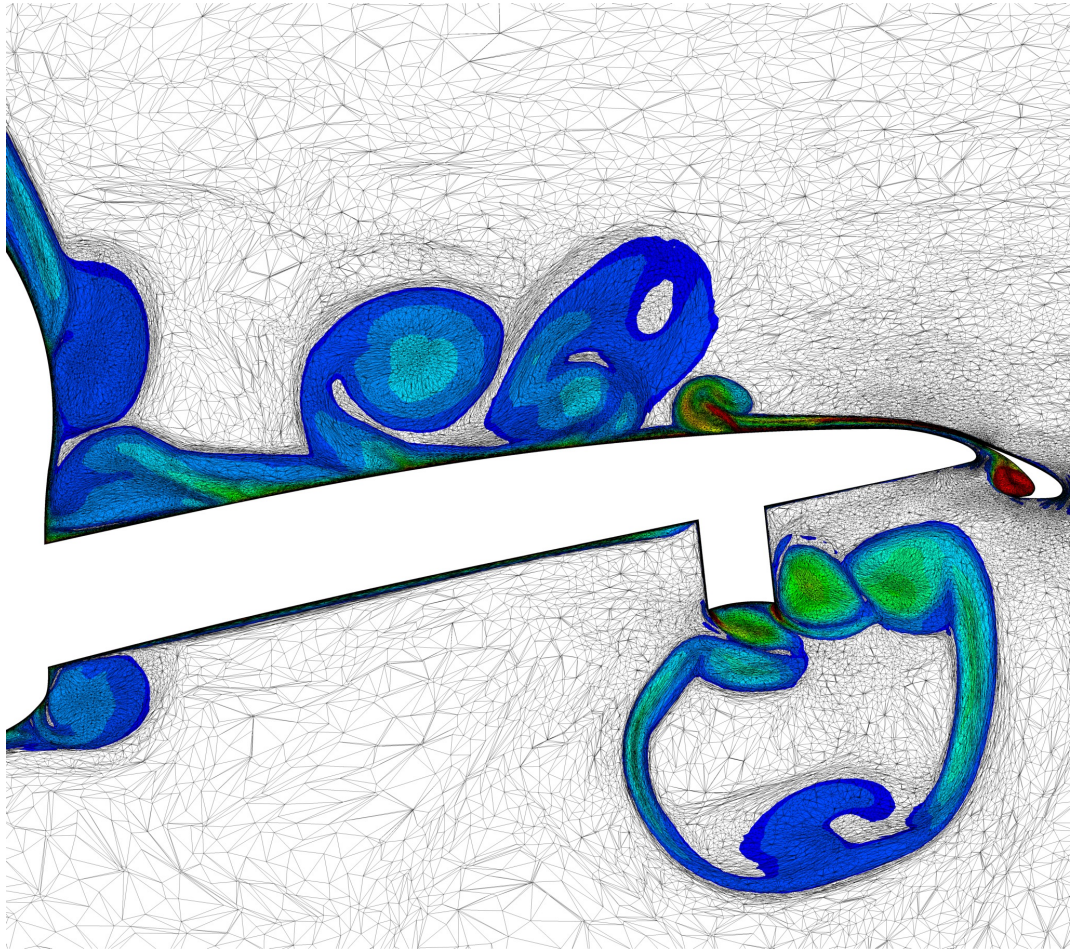

Future Plans

- What elements of current KQs need further investigation to answer?
  - Multiple solutions: additional mesh refinement and iterative convergence resolved some previously suspected instances of multiple solutions. The upper nacelle and details of the outer wing “pizza slice” remain under investigation.
  - Larger mesh sizes to lower variation: HPC resources, primal/adjoint solver convergence, 4 bit integers in remeshers, hybrid CPU/GPU execution/porting, reducing the time and number of the solution-mesh feedback loops
  - Repeat the mesh convergence 7.05° effort at near-stall angles
- What new KQs are being proposed and why?
  - Inclusion of modeling effects: SA-RC-QCR20?? and other RANS
  - Influence of wind tunnel geometry at higher angles of attack
  - Mesh adaptation extensions to HRLES and WMLES to lower variation and enable verification, which was not possible this workshop
- What additional CFD or test data is required for support the KQs?
  - Do eddy-resolving methods eliminate multiple solutions to yield lower variation in code predictions?
  - Do Fixed Mesh RANS FG solutions exhibit multiple solutions in same manner as Adapt FG?
- What additional help is required from the organizing committee to maximum learning?
  - Defining incremental unit problems for verification that enable tighter collaboration with eddy-resolving methods: highly loaded flaps, nacelle, slat wakes, juncture flow $C_{L,max}$